Outagamie County
RECYCLING & SOLID WASTE

1419 Holland Road, Appleton, WI 54911
PHONE: (920) 832-5277
FAX: (920) 788-4130

Mr. Brian M. Helminger
District Director
Heart of the Valley Metropolitan Sewerage District
801 Thilmany Road
Kaukauna, WI 54130

Dear Mr. Helminger:

We are in receipt of the January 13, 2022 correspondence from Heart of the Valley Metropolitan Sewerage District ("HOV") stating that HOV will cease accepting landfill leachate from the Outagamie County Landfill as of February 1, 2023. We are currently evaluating the legality of this notice of termination.

We are disappointed to have received a notice of termination at this juncture given the work Outagamie County Recycling and Solid Waste Department ("OCRSWD") has continued to undertake to resolve HOV's concerns regarding acceptance of landfill leachate. As you will recall, OCRSWD, HOV, and the Village of Little Chute met virtually on September 21, 2021, to discuss the Foth Infrastructure & Environment, LLC (Foth) leachate options memorandum dated August 20, 2021. After that meeting, OCRSWD sent HOV a summary of the topics discussed in a memorandum dated October 19, 2021. We indicated in the October 19 summary memorandum that OCRSWD would be continuing to further analyze leachate management options for the Northeast Landfill, including conducting additional modeling to better understand leachate volumes, loading, and future trends at the Northeast Landfill. Since our September meeting, OCRSWD has continued diligently undertaking that work.

Further, in the October 19 summary memorandum, OCRSWD requested additional information from HOV critical to ORCSWD's analysis of leachate options. These inquiries included requests for information on local limits, treatment standards, plant performance, and treatment capacity. To date, we have not received this information from HOV. Nonetheless, as described above, ORCSWD has continued to work diligently on its leachate analysis. Attached to this letter for your review is a new Northeast Landfill Leachate Management Analysis developed by Foth and dated January 26, 2022. This report further investigates and analyzes leachate management options for the Northeast Landfill.

We understand from your January 13, 2022 correspondence that HOV is open to continued discussions regarding management of landfill leachate. OCRSWD agrees that it is in all parties' best interests to continue these discussions and believes that we can come to a resolution regarding management of landfill leachate from the Northeast Landfill. In order to advance these discussions, ORCSWD respectfully requests that HOV provide a response to the inquiries listed below. These inquiries are largely from the October 19 summary memorandum. Further information on these inquiries from HOV is critical to our investigation and analysis of leachate management options.

1. HOV has requested management of NELF leachate to reduce ammonia by 70% and BOD by 50%. Please provide a description of how this would be calculated and what the basis of the reductions would be.

Outagamie County
RECYCLING & SOLID WASTE

1419 Holland Road, Appleton, WI 54911
PHONE: (920) 832-5277
FAX: (920) 788-4130

2. The 1995 leachate disposal agreement provided for acceptance of untreated NELF leachate based on typical historical volumes and strengths from the East Landfill. What was the mass loading HOV assumed at the time the parties entered into the 1995 agreement?

3. What is the actual contribution of the NELF landfill leachate as compared to the overall ammonia and BOD loading at the HOV treatment plant?

4. To the extent HOV believes that Outagamie County has failed to comply with provisions of the HOV Sewer Use Ordinance, please specify which ordinance sections Outagamie County has violated.

5. Our review of HOV records shows that the HOV treatment plant is operating significantly below its discharge limits for ammonia and BOD. Is that correct? If that is correct, and HOV is operating well within its permitted limits, please explain why limits on ammonia and BOD from the NELF are needed at this time. If that is not correct, and HOV is approaching or exceeding its permitted limits, please provide us with records documenting this concern.

6. If HOV is operating well within its permitted limits for ammonia and BOD, please explain why it appears that HOV is at or near its rated capacity for these parameters.

7. If the influent loading of ammonia and BOD exceeds 100% of the design basis of the plant, this would trigger a plan review by the WDNR. If this is the case, is HOV considering a re-rating study to determine if the influent basis of design can be increased to eliminate the WDNR plan review?

8. It is Outagamie County's understanding that HOV's treatment plant will be undergoing a $15M upgrade. Does any part of the upgrade address the ammonia/BOD treatment capacity limitations? If not, why not? What are the costs of these type of upgrades?

9. Is HOV considering or pursuing similar reductions or local limits for all industrial users?

OCRSWD would like to meet with HOV in early to mid-March to continue our discussions, provided this is a sufficient amount of time for HOV to review the attached report and answer these inquiries. We look forward to continuing our discussions and to finding a reasonable solution to the management of leachate conveyance from the Northeast Landfill.

Sincerely,

Brian Van Straten

Brian Van Straten
Director of Outagamie County Recycling & Solid Waste

Outagamie County
RECYCLING & SOLID WASTE

1419 Holland Road, Appleton, WI 54911
PHONE: (920) 832-5277
FAX: (920) 788-4130

October 19, 2021

Mr. Brian M. Helminger
District Director
Heart of the Valley Metropolitan Sewerage District
801 Thilmany Road
Kaukauna, WI 54130

Dear Mr. Helminger:

Thank you for meeting virtually with the Outagamie County Recycling & Solid Waste Department (OCRSWD) on September 21st, 2021 to discuss the Foth Infrastructure & Environment, LLC (Foth) leachate options memorandum dated August 20, 2021. In order to summarize that meeting for both parties, OCRSWD has created a list of topics discussed with the support of our engineering firm Foth. We have provided additional detail on topic points that we think may be useful to provide more clarification and to further our continued discussions.

To start, we want to emphasize that OCRSWD has worked with Heart of the Valley Metropolitan Sewerage District (HOVMSD), along with the Village of Little Chute for many years to successfully transmit and treat leachate, and we are committed to continue to work with you on leachate management.

Please find below a summary of the topics discussed. We look forward to working together on this.

Sincerely,

Brian Van Straten

Brian Van Straten
Director, Recycling & Solid Waste

1. **Timeline Overview of NWLF in relationship to the Sewer Service Amendment** – OCRSWD presented the Northwest Landfill (NWLF) siting process as it relates to leachate acceptance and the subsequent modification of the Sewer Service Area (SSA) to allow leachate from the NWLF to be treated by the city of Appleton wastewater treatment plant (WWTP).

    - July 2016 – OCRSWD started the siting process with the Wisconsin Department of Natural Resources (WDNR) for the NWLF which consisted of an initial site inspection and subsequent approval, wetlands delineation, and completion of geo technical investigation.
    - September 2018 – OCRSWD received a concurrence letter from the city of Appleton for acceptance of NWLF leachate at the city of Appleton WWTP as required for Feasibility Report submittal to the WDNR. In September 2018, the initial NWLF Feasibility Report was submitted to WDNR.
    - October 2019 – The Feasibility Report was approved by the WDNR.
    - December 2019 – The OCRSWD applied to the East Central Wisconsin Regional Planning Commission (ECWRPC) to amend the SSA for the NWLF leachate to be transmitted to the city of Appleton WWTP along with establishing the correct SSA for the existing leachate discharge to the city of Appleton from the closed West Landfill that has been ongoing for many years.
    - September 2020 – A meeting was held and the ECWRPC Community Facilities Committee accepted the SSA boundary change. This decision was made after a series of meetings and correspondence regarding amending the SSA and the results of the Leachate Options Review outlining potential options for the NWLF leachate based on concerns the city of Appleton and HOVMSD have regarding ammonia and biochemical oxygen demand (BOD) strength for the new and ongoing leachate management at the landfill.
    - December 2020 – The WDNR reviewed and approved the SSA amendment.
    - April 2021 – The WDNR reviewed and approved the NWLF Plan of Operation that includes planned discharge of the NWLF leachate to the city of Appleton WWTP.

2. **Leachate Options Review Report and Update Memorandum (August 20, 2021)** – The Leachate Option Review Report (the "Report") from September 2020 and the updated memo from August 2021 were summarized and discussed.

    - Leachate Options Review – The Report was completed to evaluate whether the SSA boundary should be changed to direct the NWLF leachate to the city of Appleton WWTP or whether it should be directed to the village of Little Chute/HOVMSD. The options review examined worst case scenario leachate volumes and strengths for all landfills at the site and evaluated treatment options to manage the ammonia and BOD loads for all leachate streams. Based on this options comparison, the SSA boundary was adjusted to direct NWLF leachate to the city of Appleton WWTP separate from the existing Northeast Landfill (NELF) leachate discharge. The options highlighted the Xogen Technologies Electrolysis Reactor systems as potential ammonia and BOD treatment technologies that could be implemented by 2023 for the NELF discharge and 2026 for the NWLF discharge. The options review stated that the potential Xogen technology would need to be examined further through pilot or bench scale testing to verify leachate treatment capabilities. In addition, the

Report states that actual leachate quantity and quality data will need to be examined and projected to confirm and evaluate whether the options identified continue to be feasible moving forward.

- August 20, 2021 Memorandum Leachate Pre-treatment Pilot Study Update (the "August 20, 2021 Memo") – The August 20, 2021 Memo was provided as an update to the process and indicated that the Xogen Technology system was no longer considered an option for pre-treatment. The August 20, 2021 Memo reset the options being evaluated to include:
  - Option 1 – Continue NELF leachate disposal at HOVMSD and manage NELF leachate ammonia and BOD load under the current process.
  - Option 2 – Continue NELF leachate disposal at HOVMSD but provide for disposal of a portion of the NELF leachate at other WWTPs to manage ammonia and BOD loads.
  - Option 3 – Continue NELF leachate disposal at HOVMSD but provide for management of the leachate or portion of the leachate at a separate MBBR treatment system potentially being constructed as part of the NWLF project around 2026.

3. **Correspondence from Heart of the Valley Metropolitan Sewerage District ("HOVMSD") RE: August 20, 2021 Memorandum (received September 21, 2021)** – A memo correspondence was prepared by the HOVMSD (the "HOVMSD Memo") to provide a response to the updated leachate management options identified in the August 20, 2021 Memo. This HOVMSD Memo was presented and discussed.

   - The HOVMSD position on the NELF leachate remains unchanged based on the current ammonia and BOD loading, amount of capacity, and the operational complexities it causes.
   - The HOVMSD expected that a pre-treatment system would be installed on the NELF leachate discharge that will reduce the ammonia load by 70% and the BOD load by 50%.
   - The HOVMSD Memo does not comment on the updated options but it does state that the HOVMSD anticipates that any option or combination of options will meet the ammonia and BOD load reductions referenced above in the leachate discharged to HOVMSD.
   - The HOVMSD Memo attachments indicate the plant is averaging over 90% of the maximum allowed ammonia and BOD discharges and that the users continue to increase in the district communities.

4. **Xogen Technologies** – The attempts to work with the company Xogen Technologies to organize a bench scale/pilot testing have failed. It appears that the company may not be actively engaged in providing this technology or systems anymore. Foth has explored other options for chemical treatment but has not identified any replacement companies or equipment. The modular style and ability to possibly add or subtract units were the key features of the Xogen system.

5. **Local Limits/Treatment Standards for Ammonia/BOD** – The group discussed the method of implementing a treatment standard for ammonia and BOD. It was indicated that HOVMSD expects the NELF leachate discharge to have ammonia loads reduced by 70% and BOD loads reduced by 50%. This was based on the assumptions presented in the Leachate Options Review. However, this is a moving standard that will be difficult to implement in a discharge agreement. The idea of implementing district-wide local limits for ammonia and/or BOD was brought up. This process would take an extended period of time and HOVMSD pointed to the impact that the landfill leachate has on their system. Several things were noted:

    - Management of ammonia and BOD using the 70%/50% reduction from the landfill is the preferred method from HOVMSD perspective. How this would be calculated must be discussed to understand an actual limit to target.
    - Management of ammonia and BOD using local limits applied equally to all customers is how OCRSWD expects reductions should be achieved.
    - A concurrence letter was received from HOVMSD to accept and treat the leachate from the NELF. It is unclear what has changed since receipt of that concurrence letter. <u>The specific volume and loading referenced in the NELF Plan of Operation permit and related documents should be examined to see how much it has increased from the original estimates.</u>
    - What is the actual contribution of the landfill leachate to the overall ammonia and BOD loading at the HOVMSD plant? <u>Some rough numbers were discussed but the overall contribution should be examined to understand how load changes will really affect the plant.</u>

6. **NELF Leachate Volume and Loading** – The expected volume and ammonia/BOD loading from the NELF as it is capped and closed was reviewed and discussed.

    - Clarification was given that the NELF is reaching its final waste capacity and it will be closed and fully capped in the next five years. In 2020, a 14-acre final cover was installed and an additional 15-acre final cover is expected to be installed in 2023 with final capping by 2027.
    - The anticipated leachate volume and ammonia/BOD loading is expected to have peaked for the NELF. Over the next five years the volume and loads are anticipated to decline in line with the filling and closure of the landfill. This leachate generation curve is typical and is expected to be similar to the East Landfill and the nearby Winnebago County Sunnyview Landfill, which were both used as regional landfills.
    - As part of the leachate management options review, it was anticipated that the future projections of leachate volume and loads would need to be examined in detail to determine if it is feasible or necessary to install a pre-treatment system for the NELF.
    - OCRSWD is preparing a projection of leachate volumes and ammonia/BOD loads from the NELF based on the expected filling/closure schedule and compared with the previous landfill leachate generation curves. This presentation may demonstrate that the expected ammonia/BOD load will go down enough to show a 70%/50% reduction within a certain amount of time that alleviates the HOVMSD treatment plant concerns. This information will be shared as part of the continuing options

review and is currently being completed as part of the larger leachate management project that will be completed by the end of 2021.

7. **NELF Capital Investment Recovery** – The feasibility of installing a pre-treatment system specific to the NELF was discussed.

    - Because the NELF capacity has largely already been filled, it will be difficult to recover the capital investment associated with installing a leachate pre-treatment system at this time. The Brown, Outagamie, Winnebago (BOW) regional waste system includes a process for managing capital investments associated with each specific landfill. This includes the NELF where the capital recovery schedule has already been set on a per cubic yard (or ton) of capacity basis.
    - The NWLF pre-treatment system investment could be recovered through user fees applied through a capital recovery schedule for the entire NWLF capacity. This is one of the reasons that OCRSWD is looking at investing in a pre-treatment system associated with the NWLF and how it could be considered as a potential way of managing a portion of the leachate from the NELF if necessary in the future.

8. **1995 Leachate Disposal Agreement/Ordinances** – The 1995 leachate disposal agreement and a sewer use ordinance were referenced and discussed.

    - The 1995 leachate disposal agreement does reference pre-treatment. It states that the County is responsible for paying the costs of pre-treatment but it does not dictate how the County accomplished the pre-treatment.
    - Non-compliance with a Sewer Use Ordinance was brought up, but no particular reference was cited for an ordinance violation. The Sewer Use Ordinance referenced must be defined and understood so that any issues with compliance can be addressed.
    - The use of the village of Little Chute sanitary sewer was raised in the context that the leachate was damaging the sewer through corrosion. It was pointed out that OCRSWD is paying for leachate disposal and including a 25% surcharge that they expect will be used to maintain the systems appropriately.

9. **HOVMSD Plant Performance/Capacity** – There was review and discussion about the HOVMSD wastewater treatment plant performance, capacity, and users. The following questions were raised on this topic:

    - What is driving the push for ammonia/BOD pre-treatment/standards when the plant is complying with its limits for these parameters? HOVMSD indicated that compliance is being maintained but the treatment capacity is being reached and there is concern about continued growth in the community and how it can be managed facing the capacity limit. HOVMSD must serve the communities it is obligated to serve and so does OCRSWD.
    - There was discussion regarding a $15M upgrade to the HOVMSD plant and whether any part of the upgrade was being considered to address the ammonia/BOD treatment capacity limitation. What are the costs of these type of upgrades?

- Is the HOVMSD plant capacity and subsequent ammonia treatment capacity based on actual performance or is it based on the theoretical plant design? Is there an opportunity to conduct a re-rating study or other way of examining the capacity to address the limitations that HOVMSD is seeing? These are items for future discussion.

Privileged and Confidential

Report

Northeast Landfill – Leachate Management Analysis

Outagamie County Recycling & Solid Waste Department
Appleton, Wisconsin

January 2022

Project I.D.: 210002.60

Solving our clients' toughest science and engineering challenges.

2121 Innovation Court, Suite 100
P.O. Box 5095
De Pere, WI 54115-5095
(920) 497-2500
foth.com

January 26, 2022

Mr. Brian Van Straten
Director
Outagamie County Recycling & Solid Waste Department
1419 Holland Road
Appleton, WI 54911

Re: Northeast Landfill – Leachate Management Analysis

Dear Mr. Van Straten:

Foth Infrastructure & Environment, LLC (Foth) has prepared this Leachate Management Analysis to provide Outagamie County Recycling & Solid Waste Department (OCRSWD) with an options analysis for future leachate management at the Northeast Landfill.

This report includes a review of historical leachate trends, presented in a leachate model where future leachate loading and volumes were predicted. Loading rate predictions focused on biochemical oxygen demand and ammonia concentrations as the primary constituents of concern for Heart of the Valley Wastewater Treatment Plant.

Leachate model predictions were used to estimate treatment costs, pretreatment costs, and hauling costs as leachate management options were analyzed. Estimates were prepared to provide a cost comparison to assist OCRSWD in determining the appropriate method of leachate management to best serve its customers and stakeholders.

Feel free to contact the undersigned with any questions.

Sincerely,

Foth Infrastructure & Environment, LLC

Marty Sturzl, P.E.
Technical Advisor
Licensed in WI

Robert J. Brillhart, P.E.
Lead Environmental Engineer
Licensed in IA, IN, KY, MI, MN, NE, OH, WI

cc: Greg Parins, Outagamie County Recycling & Solid Waste Department

Northeast Landfill - Leachate Management Analysis

Distribution

No. of Copies	Sent To
Electronic + Hard Copy	Mr. Brian Van Straten Director Outagamie County Recycling & Solid Waste Department 1419 Holland Road Appleton, WI 54911

Northeast Landfill - Leachate Management Analysis

Project ID: 21O002.60

Prepared for

Outagamie County Recycling & Solid Waste Department

Appleton, Wisconsin

Prepared by

Foth Infrastructure & Environment, LLC

January 2022

2121 Innovation Court, Suite 100 • P.O. Box 5095 • De Pere, WI 54115-5095 • (920) 497-2500

foth.com

Northeast Landfill - Leachate Management Analysis

Table of Contents

Table of Contents (continued)

Tables

Table of Contents (continued)

Figures

Appendices

Northeast Landfill - Leachate Management Analysis

Executive Summary

Outagamie County Recycling & Solid Waste Department (OCRSWD) has been evaluating leachate management at its landfill facility to determine a best approach to address increasing leachate strengths and treatment capabilities of the local wastewater treatment plants (WWTP). This report focuses all analysis efforts to date into four options for future management. These options include varying volume reductions to Heart of the Valley (HOTV) via hauling of Northeast Landfill (NELF) leachate to an alternate wastewater treatment plant in addition to installation of a pretreatment system.

HOTV has raised concerns regarding ammonia and biochemical oxygen demand (BOD) concentrations in the leachate, and they have requested OCRSWD to pretreat their leachate to limit overloading of their treatment operations. No pretreatment limits have been set by HOTV, but they have indicated they are looking to reach loading reductions of around 70% for ammonia and 50% for BOD, as feasible. A leachate model has been prepared to project the volume and strength of leachate from the NELF in the future. The model is based on historical data from similar landfills. Assuming the current closure schedule for the landfill, the model predicts the desired reductions of 70% for ammonia and 50% for BOD would be achieved over a nine-year period beginning in 2023 and continuing through the end of 2031.

An investigation into potential chemical and biological pretreatment technologies for NELF leachate was performed, including bench scale testing. It was determined that chemical pretreatment of NELF leachate was not a viable option. A biologic pretreatment system consisting of a moving bed bioreactor (MBBR) could be a viable technology for pretreatment if cost effective.

Four options were identified and evaluated for consideration for the facility's management of NELF leachate. A base case description was also discussed to compare options. The options are as listed below:

Base Case

- NELF leachate discharged to village of Little Chute/HOTV WWTP without pretreatment. Based on results of the model, the volume and loading would gradually reduce to the desired reductions of 70% for ammonia and 50% for BOD by the end of 2031.

Option 1

- A storage tank and leachate loadout would be installed in 2023. Fifty percent of volume hauled to NEW Water WWTP in Green Bay, Wisconsin and 50% discharged without pretreatment to village of Little Chute/HOTV WWTP.

Option 2

- A storage tank and leachate loadout would be installed in 2023. Seventy-five percent of volume hauled to NEW Water WWTP and 25% discharged without pretreatment to village of Little Chute/HOTV WWTP.

Option 3

- A storage tank and leachate loadout would be installed in 2023. One hundred percent of volume hauled to NEW Water WWTP.

Option 4

- A MBBR pretreatment system with 100% of the leachate from the NELF pretreated and discharged to village of Little Chute/HOTV WWTP.

A projected cost comparison of the treatment options was performed for the nine-year period beginning in 2023 and continuing to the end of 2031. The results are summarized below.

Projected Cost Summary

Alternative	Total Cost
Base Case	$1,981,000
Option 1	$3,562,000
Option 2	$4,915,000
Option 3	$6,267,000
Option 4	$10,133,000

The Base Case represents the lowest cost for leachate management for the NELF for the nine-year period beginning in 2023. This option would require continued acceptance of untreated NELF leachate by HOTV.

If the Base Case is not an acceptable option, hauling the leachate to the NEW Water WWTP for treatment would be the preferred option. The amount of leachate hauled should be negotiated to minimize the cost impact to OCRSWD and its solid waste customers.

Installation and operation of a pretreatment system for the NELF leachate is cost prohibitive.

List of Abbreviations, Acronyms, and Symbols

AWWTP	city of Appleton Wastewater Treatment Plant
BOD	biochemical oxygen demand
BOW	Brown, Outagamie, and Winnebago Counties
cy	cubic yards
DAF	dissolved air flotation
Foth	Foth Infrastructure & Environment, LLC
HOTV	Heart of the Valley Metropolitan Sewerage District Publicly Owned Treatment Works
lbs/day	pounds per day
LLDPE	low-density polyethylene
MBBR	moving bed bioreactors
mg/L	milligrams per liter
MRF	Materials Recovery Facility
NELF	Northeast Landfill
NWLF	Northwest Landfill
OCRSWD	Outagamie County Recycling & Solid Waste Department
P&ID	piping and instrumentation diagram
POO	Plan of Operation
POTW	Publicly Owned Treatment Works
TSS	total dissolved solids
WDNR	Wisconsin Department of Natural Resources
Wis. Adm. Code	Wisconsin Administrative Code
XoGen	XoGen Technologies

1. Introduction

1.1 Purpose

The purpose of this report is to evaluate options for pretreatment of leachate generated from the existing Northeast Landfill (NELF) at the Outagamie County Recycling & Solid Waste Department (OCRSWD) landfill facility in Appleton, Wisconsin. This report presents a leachate generation model which estimates the quality and quantity of leachate generated during operation and following closure of the NELF. Pretreatment methods are evaluated, and the recommended management option identified. Options were identified for future leachate treatment and a cost comparison was developed. This report includes the following sections:

Section 1 – Introduction. This section presents the purpose and scope of the report.

Section 2 – Background Information. This section presents a project background, general facility information.

Section 3 – Leachate Generation Model. This section summarizes the results of a leachate generation model for the NELF.

Section 4 – Pretreatment Technology. This section evaluates available pretreatment technology.

Section 5 – Leachate Management Options. This section presents options for future leachate treatment.

Section 6 – Projected Cost Comparison. This section presents a projected cost comparison of the leachate management options.

Section 7 – Conclusions. This section presents conclusions of the evaluation.

1.2 Scope of Work

This report was prepared to evaluate leachate management options, specifically looking at ammonia and biochemical oxygen demand (BOD) loading reduction. Historical leachate data was used to model the future leachate generation and strength at the NELF. Preliminary conceptual designs for each of the leachate pretreatment and management options were prepared for this report. Cost estimates were prepared to present the financial implications of each option over a nine-year period beginning in 2023.

Supporting information is contained in the appendices, tables, and figures.

2. Background Information

The Outagamie County Solid Waste Facility is located in the S 3/4 of Section 17, Township 21N, Range 18E, village of Little Chute, Outagamie County, Wisconsin. The location of the OCRSWD facility is shown on Figure 1. The county property encompasses approximately 450 acres, of which approximately 414 acres are used to support the Solid Waste Facility. Approximately 19 acres in the southeast corner are used by the County Highway Department and approximately 17 acres in the southwest corner are being operated as a county dog park.

Currently, the OCRSWD facility includes a Materials Recovery Facility (MRF) building, a solid waste transfer building that serves as a construction and demolition processing facility (WDNR License #4369), two maintenance buildings, two closed landfills, one active landfill, and one future landfill. The closed landfills are the 54-acre West Landfill and the 58-acre East Landfill (WDNR License #2484). The active landfill is the 53.2-acre NELF (WDNR License #3235), and the future landfill is the Northwest Landfill (NWLF) (WDNR License #4804). The locations of the landfills, the buildings, and other support facilities are shown on Figure 1.

2.1 West Landfill

The closed West Landfill began operation in 1975 and received waste until the mid-1980s, when it was closed and capped with 2 feet of clayey soils in accordance with its permit conditions. The West Landfill contains approximately 3.2 million cubic yards (cy) of waste. The West Landfill leachate discharges to the city of Appleton sanitary sewer and wastewater treatment plant (AWWTP) via a forcemain connection. The AWWTP will not require pretreatment of leachate generated from the West Landfill because the leachate contaminant concentrations are relatively low due to the nature of an older landfill. Therefore, leachate from the West Landfill is not examined further in this document.

2.2 East Landfill

The closed 58-acre East Landfill received Plan of Operation (POO) approval from the Wisconsin Department of Natural Resources (WDNR) on July 16, 1985 and had a design capacity of approximately 5.45 million cy. A vertical expansion plan modification was approved by the WDNR in February of 1997 for redesign of the final grades to recover an additional 710,000 cy of airspace which was originally approved in the Feasibility Application for the East Landfill. The East Landfill reached final capacity in early 2014 and final closure occurred in 2016. The East Landfill discharges to the Heart of the Valley (HOTV) Metropolitan Sewerage District Publicly Owned Treatment Works via a direct connection to the village of Little Chute sanitary system at two separate locations along Holland Road. The leachate contaminant concentrations are relatively low due to the nature of an older landfill. Therefore, leachate from the East Landfill is not examined further in this document.

2.3 Northeast Landfill

The POO approval for the NELF was issued in June of 2010 for a licensed airspace of 7,955,000 cy. Currently, the NELF is serving as the regional landfill for Outagamie County, Brown County, and Winnebago County (BOW). Currently, the NELF is active and serves as a regional landfill for BOW. The 53.2-acre NELF was constructed in three phases. Phase 1 (21.5 acres) began accepting waste in 2012. Phase 2 (15.1 acres) began accepting waste in

2015 and Phase 3 (16.6 acres) in 2018. Approximately 14 acres of final cover was installed over portions of Phases 1 and 2 in 2020. An additional 14 acres of final cover is tentatively planned for installation in 2025. The remainder of the final cover (~25.2 acres) is tentatively planned for installation in 2028.

The NELF also discharges to the HOTV through a direct gravity discharge connection to the village of Little Chute sanitary system along Holland Road (Figure 1).

2.4 Northwest Landfill

The POO approval for the NWLF was issued in April of 2021 for a licensed airspace of 12,165,000 cy. Construction of Phase 1 started in June of 2021 and is expected to finish in late 2023. The landfill will begin accepting waste in 2024. The NWLF will accept waste primarily from Winnebago and Outagamie Counties. AWWTP has agreed to accept untreated leachate from the NWLF beginning when Phase 1 accepts waste in 2024. The leachate will be discharged directly to a future city of Appleton sanitary sewer (construction in 2022) located on French Road.

3. Leachate Generation Model

3.1 Historical Leachate Data

Historical leachate data from three separate landfills were used to estimate the amount and strength of leachate which is anticipated to be generated during active operations (open condition) and following closure (after final cover placement). This data was collected during the operations of the NELF, the Outagamie County East Landfill, and the Winnebago County Sunnyview Landfill. Specifically, data was analyzed for ammonia and BOD concentrations, as well as leachate generation rates during active operations and following closure.

All three landfills are designed with identical final cover systems and accepted similar waste types. Phases 4 to 6 of the Sunnyview Landfill served as the BOW regional landfill prior to the NELF. Final closure of the Sunnyview Landfill was completed in 2013. The East Landfill also accepted BOW waste and final closure occurred in 2016. The NELF is active and is accepting all BOW waste.

Raw historical data from the three landfills is provided in Appendix A. The resulting model was used as the basis for evaluating options for managing leachate from the NELF in the future.

3.1.1 Historical Leachate Volumes Generated During Landfill Operation (Open Condition)

The NELF historical data is summarized on Table 1. In general, the initial year of phase operation generates significantly more leachate due to the drainage layer not being completely covered. This allows precipitation to travel directly to the leachate collection/extraction system instead of being absorbed into the waste mass. Following the initial year of operation, the leachate volume generated is relatively consistent with minor fluctuations due to precipitation events throughout the year.

Annual leachate generation rates were estimated by dividing the volume generated by the area of the landfill cell liner in each phase. This converted leachate volume to inches of leachate per acre of landfill cell liner. This conversion was used to estimate leachate generation across different sized cells.

The estimated average amount of leachate generated for the initial year of operation of each phase is 11.4 inches based on the data in Table 1. The estimated average annual amount of leachate generated for all other years of operation (prior to final cover installation) of each phase is 6.3 inches based on the data in Table 1.

3.1.2 Historical Leachate Volumes Generated Following Landfill Final Cover Construction (Closed Condition)

Final cover construction per current Wisconsin Administrative Code (Wis. Adm. Code) requirements consists of installation of a 2-foot-thick compacted clay layer overlain with a 40-mil linear low-density polyethylene (LLDPE) geomembrane. The cover essentially cuts off the infiltration of precipitation into those areas of landfill.

The East Landfill and the Sunnyview Landfill have both been completely closed with final cover for several years. Leachate generation volume data from the Sunnyview Landfill following

closure is summarized in Table 2. Leachate generation volume data from the East Landfill following closure is summarized in Table 3.

A review of the historical data indicates the leachate generation volume remains relatively constant the first year following construction of the final cover system and then reduces by approximately 25% year after year. For purposes of this analysis, a 25% reduction of leachate generation is assumed starting the second year following closure. It appears the leachate generation volumes at both closed landfills are still declining, therefore the final stabilized leachate generation rate has been conservatively estimated to be 1 inch. This leachate generation rate is accepted by WDNR for landfills with similar cover designs.

3.1.3 Historical Ammonia and BOD Concentrations During Landfill Operation (Open Condition)

Historical data for ammonia and BOD concentrations in leachate are summarized in Tables 1 through 3. A comparison of the data shows a fairly significant difference between the three landfills. This can be accounted for by differences in waste types and ages of the waste in each landfill. The most current data is from the NELF and is likely the most accurate data to use for future projections for NELF leachate.

The following are estimated concentrations for ammonia:

- Years 1 and 2 of Phase Operation – 324 milligrams per liter (mg/L)
- Years 3 through 5 of Phase Operation – 1,079 mg/L
- Years 6 to Closure – 1,663 mg/L

The following are estimated concentrations for BOD:

- Year 1 of Phase Operation – 8,142 mg/L
- Years 2 through 3 of Phase Operation – 4,982 mg/L
- Years 4 to Closure – 535 mg/L

3.1.4 Historical Ammonia and BOD Concentrations Following Landfill Final Cover Construction (Closed Condition)

Historical data in Tables 2 and 3 were evaluated to determine if the concentrations of ammonia and BOD in leachate declined following completion of the landfill final cover construction. The historical data shows fluctuations in ammonia and BOD concentrations but does not show a significant reduction. Therefore, the most recent ammonia and BOD averages are used for modeling ammonia and BOD loads for future leachate generation.

The following is estimated annual concentrations for ammonia, based on historical NELF averages year 6 through closure:

- Post Closure – 1,663 mg/L

The following is estimated annual concentrations for BOD, based on historical NELF averages year 4 through closure:

- Post Closure – 535 mg/L

3.2 Projected Leachate Generation

The estimated leachate generation rates presented in Sections 3.1.1 and 3.1.2 above were used to project leachate generation in the future for the NELF. The appropriate leachate generation rate was multiplied by the phase area for each year of operation and post closure.

The projected future leachate generation for each phase of the NELF is shown on Tables 4 through 6. Table 7 provides a summary of projected total annual leachate generation. The model predicts a peak average daily generation of approximately 24,900 gallons in 2021 and a post closure average daily leachate generation of approximately 4,000 gallons. The model is summarized graphically on Figure 2. Tables 8 and 9 provide BOD and ammonia loading for the NELF as described in Section 3.3.

3.3 Projected Ammonia and BOD Mass Loading

The estimated ammonia and BOD concentrations presented in Sections 3.1.3 and 3.1.4 above were used to project mass loading in the future for the NELF. The appropriate concentration was multiplied by the phase area for each year of operation and post closure.

The projected future ammonia and BOD mass loading for the NELF is shown in Tables 8 and 9. The model predicts a peak average daily ammonia amount of 346.0 pounds per day (lbs/day) in 2021 declining steadily to a post closure amount of 54.9 lbs/day. The model predicts a peak average daily BOD amount of 111.3 lbs/day in 2021 declining steadily to a post closure amount of 17.7 lbs/day. The model is summarized graphically on Figure 2.

3.4 Projected NELF Ammonia Reduction

The ammonia mass load will reduce proportionately with the reduction in leachate generation as the NELF is gradually closed. The modeled reduction is shown on Figure 2. The ammonia load is predicted to reduce by 70% (from current level) by the end of 2031.

3.5 Projected NELF BOD Reduction

The BOD mass load will reduce proportionately with the reduction in leachate generation as the NELF is gradually closed. The modeled reduction is shown on Figure 2. The BOD load is predicted to reduce by 50% (from current level) by the end of 2031.

4. Pretreatment Technology

4.1 General

Two primary treatment technologies were evaluated to reduce the levels of ammonia and BOD in the leachate prior to discharge to a public WWTP. The technologies are: 1) chemical oxidation; and 2) aerobic biological treatment. Each technology is described below.

4.2 Chemical Oxidation

4.2.1 Background

Two specific vendors for development of a chemical pretreatment system were contacted and evaluated to determine if their process was suitable for the treatment of leachate from the NELF. The two companies were: 1) Xogen Technologies; and 2) Phosphorus Free Water Solutions. The results of the evaluation are summarized below.

4.2.2 XoGen Technologies

XoGen Technologies (XoGen) is a research-based company contacted by Foth Infrastructure & Environment, LLC (Foth) in 2020 to obtain preliminary pretreatment capabilities for an advanced electro oxidation process for removal of ammonia from landfill leachate. XoGen's electrolysis reactor is a relatively new technology not supported by years of application on landfill leachate. Therefore, Foth recommended that pilot testing be performed on the NELF leachate to verify the suitability of this technology.

Since starting the process to perform leachate pretreatment pilot testing, XoGen has not provided consistent communications or expressed interest in providing pilot testing for the project. Chemical treatments of leachate are often still in the research phase and have not been widely implemented over the solid waste industry. Multiple chemical-based treatment companies were contacted by Foth, with many of them declining the opportunity to design a preliminary pretreatment system. Application of such a system for leachate pretreatment at OCRSWD would be one of the first of its kind and an experimental process.

Several attempts have been made to contact XoGen, but they have been unresponsive. Since the XoGen process is unproven for treatment of leachate and now they are unresponsive, Foth recommends eliminating XoGen as an option.

4.2.3 Phosphorus Free Water Solutions

Ammonia can be removed by physical and/or chemical technologies such as advanced electro oxidation processes in landfill leachate.

Bench testing was conducted by Phosphorus Free Water Solutions to determine the process and efficiency for reduction of ammonia in the leachate. The tested sample required chemical treatment prior to the electrolysis reactor to reduce the concentration of ammonia to less than 500 mg/L. The chemical treatment step included a pH adjustment step and air scrubber to remove approximately 70% of the ammonia. Following the chemical pretreatment step, the leachate was pumped through an electrolysis reactor. As the leachate contacts an electrode in the reactor, a direct oxidation of the contaminants (in this case BOD and ammonia) occurs on the surface of the electrode. Bleach was added to the influent of the reactor as an oxidant to

react with organic matter, ammonia compounds, and other constituents in aqueous solution. The result of the reactions is a conversion of the contaminants into a mixture of hydrogen, oxygen, carbon dioxide, and nitrogen gas.

Advanced oxidative treatment processes are relatively new technologies not supported by years of application on landfill leachate. Bench testing was unable to adequately reduce ammonia to target levels for discharge to HOTV. Bench testing determined that the concentration of ammonia exceeded the limits of this technology and additional pretreatment steps would be required to achieve a satisfactory ammonia reduction result. Based on the results of the bench testing, Foth does not recommend pursing advanced oxidation as a solution to reduce the ammonia concentration in landfill leachate.

4.3 Aerobic Biological Treatment

Aerobic biological treatment is a process used to remove particulate and soluble BOD, total dissolved solids (TSS), and nutrients (nitrogen and phosphorus) from sewage and/or industrial wastewaters. The aerobic process utilizes microorganisms in the presence of oxygen to oxidize organic carbon and nitrogen compounds, as well as reduce nutrients. The process involves the introduction of air or oxygen into a mixture of wastewater and microorganisms to promote reduction of the organic and nutrient content of the wastewater. The bacteria consume this material to produce new cells and other end products.

Several variations of aerobic biological processes exist, including suspended growth and fixed growth processes. Suspended growth processes include conventional activated sludge and extended aeration systems. These systems can be contained within earthen basins (e.g., lagoons) or tanks. Fixed growth processes include trickling filters rotating biological contactors and moving bed bioreactors (MBBR). The difference between suspended and fixed growth systems is that in suspended growth systems, the microbes are dispersed throughout the liquid medium, whereas in fixed growth systems, the microbes are attached to a solid medium such as gravel or plastic.

Suspended growth systems typically include a solids-liquid separation process to remove the microorganisms from the liquid phase. Several solids-liquid separation processes can be used to separate the biomass from the treated water, including gravity settling (clarification), ultrafiltration membrane technology, and dissolved air flotation (DAF).

The activated sludge process relies on a balance between the mass of microbes present and the mass of organics in the influent wastewater to ensure adequate reduction of pollutants. A portion of the microorganisms removed from the liquid stream during the solids-liquid separation step is returned to the aerobic reactor to maintain an adequate mass of bacteria to consume the mass of organic material entering the system. The return stream is commonly referred to as return activated sludge.

As new microorganisms are produced, a given fraction of the organisms need to be removed from the system to maintain the balance between the required biomass and the influent organics for adequate treatment. The mass of organisms removed from the system is commonly referred to as waste activated sludge. The waste sludge can be disposed of in the landfill.

Fixed growth systems typically require smaller footprints and are less prone to toxic upset and environmental changes. In this particular case, solids-liquid separation would not be required given that the microbes would be retained in the tank, thereby maintaining the proper food to mass ratio, and the facility has no TSS limitation for wastewater disposed via discharge to a Publicly Owned Treatment Works (POTW).

If pretreatment is selected as an option, MBBR aerobic biological systems warrant further evaluation due to the following:

- Reduced footprint compared to other evaluated technologies;
- Ease of operations – does not require a highly skilled operator;
- MBBR process resistant to process upsets due to varying flow and organic loadings;
- MBBR process resistant to toxic upsets from sanitation chemicals;
- Relatively low maintenance requirements;
- Does not impact existing process wastewater storage volumes;
- Reduces oxygen demand in the downstream storage ponds, reducing the potential of H_2S formation;
- Ability to remain dormant for an extended period of time;
- Relatively short start-up period; and
- Ease of future flexibility/retrofit to adapt to changes in the production facility.

A MBBR pretreatment system would be a viable treatment technology for the Outagamie County Landfill. A conceptual piping and instrumentation diagram (P&ID) for the treatment process is shown on Figure 3.

5. Leachate Management Options

5.1 General

The leachate management options evaluated in this study are limited to leachate generated at the active NELF. Leachate generated at the closed East and West Landfills has not been included because the volumes and concentrations of the leachate from these landfills is below levels of concern.

HOTV WWTP is currently accepting leachate generated at the NELF without pretreatment. OCRSWD has expressed a willingness to work with HOTV WWTP to manage the discharge from the NELF to help maintain its compliance with its discharge limits. This is considered the "base case."

HOTV WWTP has expressed an expectation that OCRSWD would install a pretreatment system for the leachate generated at the NELF which would significantly reduce the ammonia and BOD mass loading. However, mass-based discharge limits have not been established. The following are options identified as alternatives for future management of leachate from the NELF for the nine-year period beginning in 2023.

Base Case

- NELF Leachate – discharged to village of Little Chute/HOTV WWTP without pretreatment. The volume and loading are predicted to gradually reduce to the desired reduction goals of 70% for ammonia and 50% for BOD by the end of 2031.

Option 1

- A storage tank and leachate loadout would be installed in 2023. Fifty percent of volume hauled to NEW Water WWTP in Green Bay, Wisconsin and 50% discharged without pretreatment to village of Little Chute/HOTV WWTP.

Option 2

- A storage tank and leachate loadout would be installed in 2023. Seventy-five percent of volume hauled to NEW Water WWTP and 25% discharged without pretreatment to village of Little Chute/HOTV WWTP.

Option 3

- A storage tank and leachate loadout would be installed in 2023. One hundred percent of volume hauled to NEW Water WWTP.

Option 4

- A MBBR pretreatment system with 100% of the leachate from the NELF pretreated and discharged to village of Little Chute/HOTV WWTP.

Each option is discussed in further detail below.

5.2 Base Case

The "base case" represents the current plan for management of leachate generated in the NELF. Leachate generated in the NELF will continue to be discharged to the village of Little Chute/HOTV WWTP. OCRSWD will continue to work with HOTV to manage the discharge in a

manner which allows HOTV to maintain compliance with its discharge limits. Leachate volumes are projected to decline steadily over the nine-year period ending in 2031, to a level which is 70% lower than current volumes.

5.3 Option 1 – 50% Reduction to HOTV

Option 1 consists of installation of a 50,000-gallon leachate storage tank and loadout system for the NELF to allow hauling of NELF leachate to an alternative wastewater treatment facility. Leachate transfer piping from the NELF would need to be rerouted to the storage tank as shown on Figure 4. NEW Water WWTP has agreed to accept untreated leachate from the NELF. Option 1 consists of hauling and treating 50% of the NELF leachate at NEW Water WWTP. The remaining 50% of the leachate volume will be discharged untreated to the village of Little Chute/HOTV. Hauling of leachate to NEW Water WWTP will end when the leachate generation volumes reduce by 50% over current volumes. This is projected to occur in 2030.

5.4 Option 2 – 75% Reduction to HOTV

Option 2 consists of installation of a 50,000-gallon leachate storage tank and loadout system for the NELF to allow hauling of NELF leachate to an alternative wastewater treatment facility. Leachate transfer piping from the NELF would need to be rerouted to the storage tank as shown on Figure 4. NEW Water WWTP has agreed to accept untreated leachate from the NELF. Option 2 consists of hauling and treating 75% of the NELF leachate at NEW Water WWTP. The remaining 25% of the leachate volume will be discharged untreated to the village of Little Chute/HOTV. Hauling of leachate to NEW Water WWTP will end when the leachate generation volumes reduce by 70% over current volumes. This is projected to occur in 2031.

5.5 Option 3 – 100% Reduction to HOTV

Option 3 consists of installation of a 50,000-gallon leachate storage tank and loadout system for the NELF to allow hauling of NELF leachate to an alternative wastewater treatment facility. Leachate transfer piping from the NELF would need to be rerouted to the storage tank as shown on Figure 4. NEW Water WWTP has agreed to accept untreated leachate from the NELF. Option 3 consists of hauling and treating 100% of the NELF leachate at NEW Water WWTP. Hauling of leachate to NEW Water WWTP will continue indefinitely.

5.6 Option 4 – 100% Pretreatment

Option 4 consists of installation of a MBBR pretreatment system to treat 100% of the NELF leachate to reduce the ammonia load by 70% and the BOD load by 50%. The proposed location for the pretreatment facility is shown on Figure 5. The effluent from the pretreatment facility would be discharged to the village of Little Chute's sanitary sewer via a connection to an existing forcemain on the south side of the East Landfill (Figure 5). A double encased forcemain would be needed to transfer leachate from the NELF to the pretreatment facility.

6. Projected Cost Comparison

6.1 General

This section provides an evaluation of the cost effectiveness of the various leachate management alternatives identified in Section 5. In order to make a cost-effective comparison between selected alternatives, it is necessary to prepare preliminary designs. These preliminary designs are based on consideration of future projected leachate generation and ammonia and BOD mass loading, projected effluent limits, standard wastewater engineering practices, and Wis. Adm. Code requirements for process design. For comparison purposes, the total combined operating, maintenance, and treatment costs for the NELF for each option has been estimated over the time period of 2023 to 2031.

6.2 Projected Cost Analysis

Specific leachate pretreatment options were evaluated to compare total costs over a nine-year period. The interest rate used in this evaluation was 2.875%; this is the current discount rate for wastewater system facilities planning as published on the WDNR website for the 2022 fiscal year.

A detailed cost analysis is provided for each management option evaluated. The detailed cost estimate analyses are located in Appendix B. The analyses include capital costs, treatment costs, and operation and maintenance costs. Capital costs were estimated based on budget quotes from equipment vendors, installation costs, estimated quantity take-offs using typical unit prices and miscellaneous bid costs as seen on previous projects. Operation and maintenance costs include power, labor, hauling, and POTW costs. These were estimated based on vendor information, as well as HOTV WWTP treatment rates (Appendix C).

The capital costs, treatment costs, and operation and maintenance costs were projected using a 2.875% inflation rate. The estimated capital, legal, engineering, administrative, and contingency costs were added to provide the total projected cost for each option for the nine-year period. This format and methodology was used for all cost-effective comparisons presented in this report.

The following sections of this report provide the cost comparison for the various leachate management options evaluated.

6.2.1 Leachate Management Options Evaluation

6.2.1.1 Base Case

The base case option presented involves continued operation with NELF leachate discharging to HOTV. No capital improvements have been included with the base case for managing NELF leachate. Operation and maintenance costs for the base case would consist of associated fees from discharging NELF leachate to HOTV.

6.2.1.2 Option 1

Option 1 involves hauling 50% generated NELF leachate to NEW Water WWTP for treatment and disposal with the remaining leachate from the NELF discharging to HOTV untreated.

Specifically, Option 1 includes installation of a new 50,000-gallon double-walled lined tank, concrete tank base, truck loadout station, valve manhole, pumps, instrumentation and controls, and associated piping for collection and hauling of 50% of the NELF leachate.

Operation and maintenance costs would consist of pump power, hauling costs and associated treatment costs for 50% of NELF leachate at NEW Water WWTP, treatment costs for 50% of untreated NELF leachate discharging to HOTV, and electrical costs associated with the loadout system.

The existing leachate pumps should be evaluated to ensure pump performance will be adequate with the installation of the proposed collection tank system.

6.2.1.3 Option 2

Option 2 involves hauling 75% generated NELF leachate to NEW Water WWTP for treatment and disposal with the remaining leachate from the NELF discharging to HOTV untreated.

Specifically, Option 2 includes installation of a new 50,000-gallon double-walled lined tank, concrete tank base, truck loadout station, valve manhole, pumps, instrumentation and controls, and associated piping for collection and hauling of 75% of the NELF leachate.

Operation and maintenance costs would consist of pump power, hauling costs, and associated treatment costs for 75% of NELF leachate at NEW Water WWTP, treatment costs for 25% of untreated NELF leachate discharging to HOTV, and electrical costs associated with the loadout system.

6.2.1.4 Option 3

Option 3 involves hauling 100% generated NELF leachate to NEW Water WWTP for treatment and disposal.

Specifically, Option 3 includes installation of a new 50,000-gallon double-walled lined tank, concrete tank base, truck loadout station, valve manhole, pumps, instrumentation and controls, and associated piping for collection and hauling of 100% of the NELF leachate.

Operation and maintenance costs would consist of pump power, hauling costs, and associated treatment costs of 100% of NELF leachate at NEW Water WWTP, and electrical costs associated with the loadout system.

6.2.1.5 Option 4

Option 4 consists of installation of a MBBR pretreatment system to treat 100% of the NELF leachate to reduce the ammonia load by 70% and the BOD load by 50%. The proposed location for the pretreatment facility is shown on Figure 5. The effluent from the pretreatment facility would be discharged to the village of Little Chute's sanitary sewer via a connection to an existing forcemain on the south side of the East Landfill (Figure 5). A double encased forcemain would be needed to transfer leachate from the NELF to the pretreatment facility.

Operation and maintenance costs would consist of pump power, and associated treatment costs for 100% of pretreated NELF leachate at HOTV, Little Chute fees, and electrical costs associated with operating the system. In addition, one full-time operator will be required.

6.2.2 Summary of Leachate Management Options Evaluation

Detailed cost estimates are provided in Appendix B. A summary of the projected costs for each option is included below:

Projected Cost Summary

Alternative	Total Projected Cost
Base Case – NELF discharged to HOTV untreated	$1,981,000
Option 1 – Haul 50% of NELF leachate to NEW Water WWTP. Remaining 50% discharged to Little Chute/HOTV untreated.	$3,562,000
Option 2 – Haul 75% of NELF leachate to NEW Water WWTP. Remaining 25% discharged to Little Chute/HOTV untreated.	$4,915,000
Option 3 – Haul 100% of NELF leachate to NEW Water WWTP.	$6,267,000
Option 4 – Pretreat 100% of leachate and discharge to Little Chute/HOTV.	$10,133,000

6.2.3 Assumptions/Limitations

The projected cost estimates were prepared with the following assumptions/limitations:

- Estimates are based on leachate volumes and characteristics predicted by the leachate model presented in Section 3. Actual volumes and characteristics will vary based on actual waste volumes and types, precipitation, and timing of landfill final cover construction.
- Leachate treatment costs are based on information provided by HOTV, and NEW Water WWTP. Documentation is provided in Appendix C.
- Construction costs are preliminary based on conceptual designs and are for comparison purposes. A contingency of 25% has been included to account for the uncertainty of future inflation of construction and material costs. Costs are in 2022 dollars unless indicated otherwise.
- Projected costs based on a nine-year operating period and an annual inflation rate of 2.875%.
- It is assumed funds for capital projects will be borrowed at an interest rate of 2%.

7. Conclusions

7.1 Pretreatment Technology

Two primary treatment technologies were evaluated to reduce the levels of ammonia and BOD in the leachate prior to discharge to a public WWTP. The technologies evaluated were: 1) chemical oxidation treatment; and 2) aerobic biological treatment.

Chemical oxidation is not recommended based on results of bench testing on leachate from the NELF and the reliance on unproven proprietary technology.

Aerobic biological treatment (MBBR) is proven technology and is a viable treatment process if pretreatment is installed. Pretreatment is not cost effective based on the results of the cost comparison.

7.2 Projected Cost Comparison

A base case and four options were identified and evaluated for consideration for the facility's future leachate management. The presented options include varying leachate volume reductions to HOTV WWTP, via hauling of NELF leachate to an alternative WWTP or construction and operation of a pretreatment facility.

Cost information was prepared to present the financial implications for each option, which we recommend be used to help guide discussions and decisions for future management of leachate.

The Base Case represents the lowest cost for leachate management for the NELF for the nine-year period beginning in 2023 and continuing to the end of 2031. This option would require continued acceptance of untreated NELF leachate by HOTV.

If the Base Case is not an acceptable option, hauling the leachate to the NEW Water WWTP for treatment would be the preferred option. The amount of leachate hauled should be negotiated to minimize the cost impact to OCRSWD and its solid waste customers.

Installation of a pretreatment system for the NELF leachate is cost prohibitive.

7.3 Future Considerations

As mentioned throughout this report, the requirements and rates of each WWTP are important factors in each option presented. Further discussions with the WWTP's are recommended to agree to an outcome which will be in OCRSWD' best interests.

The schedule for future final cover construction on the NELF can be adjusted to occur sooner to reduce leachate generation earlier than predicted in the models. This could allow for loading and volumes reduction targets to be reached earlier. The proposed capping schedule should be considered as an option for managing future leachate.

OCRSWD should continue to explore other options for ammonia and BOD reduction within leachate.

When preparing plans to implement a leachate pretreatment option, OCRSWD should include an assessment of available grants to determine if the facility is eligible for external funding.

Tables

Table 1

NELF - Summary of Historical Leachate Information (Phases 1-3)

Year of Operation	Total Annual Leachate (inches)				Ammonia (mg/L)				BOD (mg/L)			
	Phase 1	Phase 2	Phase 3	Average	Phase 1	Phase 2	Phase 3	Average	Phase 1	Phase 2	Phase 3	Average
1	11.9	7.9	14.4	11.4	235	93	396	241	8,475	1,162	14,789	8,142
2	5.0	5.9	7.3	6.0	212	294	714	406	1,830	2,942	11,445	5,406
3	4.7	6.6	5.9	5.7	819	665	1,809	1,098	681	364	12,632	4,559
4	5.5	5.6	-	5.6	974	1,100	-	1,037	403	224	-	313
5	5.4	7.1	-	6.2	1,102	1,101	-	1,102	298	202	-	250
6	7.1	8.8	-	7.9	1,733	1,466	-	1,600	1,532	468	-	1,000
7	5.2	-	-	5.2	1,963	-	-	1,963	612	-	-	612
8	5.8	-	-	5.8	1,329	-	-	1,329	411	-	-	411
9	8.1	-	-	8.1	1,759	-	-	1,759	626	-	-	626
	Average year 1 =			11.4	Ave. years 1 & 2 =			323.7	Ave. year 1 =			8,141.9
	Ave. years 2 to closure =			6.3	Ave. years 3-5 =			1,078.9	Ave. years 2-3 =			4,982.3
					Ave. years 6 to closure =			1,662.6	Ave. years 4 to closure =			535.4

Notes:
Ave. = average
BOD = biochemical oxygen demand
mg/L = milligram per liter

Prepared by: MRS
Checked by: SMB2

Table 2

Winnebago County Sunnview Landfill - Historical Leachate Information
Phases 4 through 6 Following Closure

Year of Closure	Total Annual Leachate (inches)	Ammonia (mg/L, ave.)	BOD (mg/L, ave.)
0	3.3	1,126	924
1	2.4	1,064	439
2	1.5	1,096	804
3	1.2	1,068	610
4	1.0	1,368	911
5	0.9	1,303	449
6	0.6	1,249	567
	Average Post Closure Reduction (%) = -25%	Average Post Closure (mg/L) = 1,182	Average Post Closure (mg/L) = 672

Notes:
ave. = average
BOD = biochemical oxygen demand
mg/L = milligram per liter

Prepared by: MRS
Checked by: SMB2

Table 3
Outagamie County East Landfill
Historical Leachate Information Following Closure

Year of Closure	Total Annual Leachate (inches)	Ammonia (mg/L, ave.)	BOD (mg/L, ave.)
0	4.5	1,126	924
1	3.0	1,064	439
2	2.1	1,096	804
3	1.9	1,068	610
4	1.3	1,368	911
	Average Post Closure Reduction (%) = -27%	Average Post Closure (mg/L) = 1,144	Average Post Closure (mg/L) = 737

Notes:
ave. = average
BOD = biochemical oxygen demand
mg/L = milligram per liter

Prepared by: MRS
Checked by: SMB2

Table 4
NELF Phase 1 - Estimated Leachate Generation Rates

Year of Operation NELF Operation	Year of Operation Phase Operation	Lined Area (acres)	Open Area (acres)			Final Cover Sequence 1			Final Cover Sequence 2			Final Cover Sequence 3			Total Leachate Generation (gallons)
			Open Area (acres)	Estimated Leachate Generation (inches)[1]	Estimated Leachate Generation (gallons)	Final Covered Areas (acres)	Estimated Leachate Generation (inches)[2]	Estimated Leachate Generation (gallons)	Final Covered Areas (acres)	Estimated Leachate Generation (inches)[2]	Estimated Leachate Generation (gallons)	Final Covered Areas (acres)	Estimated Leachate Generation (inches)[2]	Estimated Leachate Generation (gallons)	
2021	1	21.5	10.0	6.3	1,710,601	11.5	6.3	1,967,191	0	0.0	0	0	0.0	0	3,677,793
2022	2	21.5	10.0	6.3	1,710,601	11.5	4.7	1,475,394	0	0.0	0	0	0.0	0	3,185,995
2023	3	21.5	10.0	6.3	1,710,601	11.5	3.5	1,106,545	0	0.0	0	0	0.0	0	2,817,146
2024	4	21.5	10.0	6.3	1,710,601	11.5	2.7	829,909	0	0.0	0	0	0.0	0	2,540,510
2025	5	21.5	10.0	6.3	1,710,601	11.5	2.0	622,432	0	0.0	0	0	0.0	0	2,333,033
2026	6	21.5	1.6	6.3	273,696	11.5	1.5	466,824	8.4	6.3	1,436,905	0	0.0	0	2,177,425
2027	7	21.5	1.6	6.3	273,696	11.5	1.1	350,118	8.4	4.7	1,077,679	0	0.0	0	1,701,493
2028	8	21.5	1.6	6.3	273,696	11.5	1.0	312,253	8.4	3.5	808,259	0	0.0	0	1,394,208
2029	9	21.5	0.0	0.0	0	11.5	1.0	312,253	8.4	2.7	606,194	1.6	6.3	273,696	1,192,143
2030	10	21.5	0.0	0.0	0	11.5	1.0	312,253	8.4	2.0	454,646	1.6	4.7	205,272	972,170
2031	11	21.5	0.0	0.0	0	11.5	1.0	312,253	8.4	1.5	340,984	1.6	3.5	153,954	807,191
2032	12	21.5	0.0	0.0	0	11.5	1.0	312,253	8.4	1.1	255,738	1.6	2.7	115,466	683,456
2033	13	21.5	0.0	0.0	0	11.5	1.0	312,253	8.4	1.0	228,080	1.6	2.0	86,599	626,932
2034	14	21.5	0.0	0.0	0	11.5	1.0	312,253	8.4	1.0	228,080	1.6	1.5	64,949	605,282
2035	15	21.5	0.0	0.0	0	11.5	1.0	312,253	8.4	1.0	228,080	1.6	1.1	48,712	589,045
2036	16	21.5	0.0	0.0	0	11.5	1.0	312,253	8.4	1.0	228,080	1.6	1.0	43,444	583,777
2036+	16+	21.5	0.0	0.0	0.0	11.5	1.0	312,253	8.4	1.0	228,080	1.6	1.0	43,444	583,777

Notes:
[1] Assumes 11.4 inches of leachate generation for open areas without final cover during initial year of operation and 6.3 inches for all years thereafter.
[2] Assumes a 25% annual reduction following final cover construction, stablizing at 1 inch.

Prepared by: MRS
Checked by: SMB2

Table 5
NELF Phase 2 - Estimated Leachate Generation Rates

Year of Operation NELF Operation	Year of Operation Phase Operation	Lined Area (acres)	Open Area (acres)			Final Cover Sequence 1			Final Cover Sequence 2			Final Cover Sequence 3			Total Leachate Generation (gallons)
			Open Area (acres)	Estimated Leachate Generation (inches)[1]	Estimated Leachate Generation (gallons)	Final Covered Areas (acres)	Estimated Leachate Generation (inches)[2]	Estimated Leachate Generation (gallons)	Final Covered Areas (acres)	Estimated Leachate Generation (inches)[2]	Estimated Leachate Generation (gallons)	Final Covered Areas (acres)	Estimated Leachate Generation (inches)[2]	Estimated Leachate Generation (gallons)	
2021	1	15.1	12.6	6.3	2,155,358	2.5	6.3	427,650	0	0.0	0	0	0.0	0	2,583,008
2022	2	15.1	12.6	6.3	2,155,358	2.5	4.7	320,738	0	0.0	0	0	0.0	0	2,476,095
2023	3	15.1	12.6	6.3	2,155,358	2.5	3.5	240,553	0	0.0	0	0	0.0	0	2,395,911
2024	4	15.1	12.6	6.3	2,155,358	2.5	2.7	180,415	0	0.0	0	0	0.0	0	2,335,772
2025	5	15.1	12.6	6.3	2,155,358	2.5	2.0	135,311	0	0.0	0	0	0.0	0	2,290,669
2026	6	15.1	11.0	6.3	1,881,661	2.5	1.5	101,483	1.6	6.3	273,696	0	0.0	0	2,256,841
2027	7	15.1	11.0	6.3	1,881,661	2.5	1.1	76,113	1.6	4.7	205,272	0	0.0	0	2,163,046
2028	8	15.1	11.0	6.3	1,881,661	2.5	1.0	67,881	1.6	3.5	153,954	0	0.0	0	2,103,496
2029	9	15.1	0.0	0.0	0	2.5	1.0	67,881	1.6	2.7	115,466	11.0	6.3	1,881,661	2,065,008
2030	10	15.1	0.0	0.0	0	2.5	1.0	67,881	1.6	2.0	86,599	11.0	4.7	1,411,246	1,565,726
2031	11	15.1	0.0	0.0	0	2.5	1.0	67,881	1.6	1.5	64,949	11.0	3.5	1,058,434	1,191,265
2032	12	15.1	0.0	0.0	0	2.5	1.0	67,881	1.6	1.1	48,712	11.0	2.7	793,826	910,419
2033	13	15.1	0.0	0.0	0	2.5	1.0	67,881	1.6	1.0	43,444	11.0	2.0	595,369	706,694
2034	14	15.1	0.0	0.0	0	2.5	1.0	67,881	1.6	1.0	43,444	11.0	1.5	446,527	557,852
2035	15	15.1	0.0	0.0	0	2.5	1.0	67,881	1.6	1.0	43,444	11.0	1.1	334,895	446,220
2036	16	15.1	0.0	0.0	0	2.5	1.0	67,881	1.6	1.0	43,444	11.0	1.0	298,676	410,001
2036+	16+	15.1	0.0	0.0	0	2.5	1.0	67,881	1.6	1.0	43,444	11.0	1.0	298,676	410,001

Notes:
[1] Assumes 11.4 inches of leachate generation for open areas without final cover during initial year of operation and 6.3 inches for all years thereafter.
[2] Assumes a 25% annual reduction following final cover construction, stablizing at 1 inch.

Prepared by: MRS
Checked by: SMB2

Table 6
NELF Phase 3 - Estimated Leachate Generation Rates

Year of Operation NELF Operation	Year of Operation Phase Operation	Lined Area (acres)	Open Area (acres)			Final Cover Sequence 1			Final Cover Sequence 2			Final Cover Sequence 3			Total Leachate Generation (gallons)
			Open Area (acres)	Estimated Leachate Generation (inches)[1]	Estimated Leachate Generation (gallons)	Final Covered Areas (acres)	Estimated Leachate Generation (inches)[2]	Estimated Leachate Generation (gallons)	Final Covered Areas (acres)	Estimated Leachate Generation (inches)[2]	Estimated Leachate Generation (gallons)	Final Covered Areas (acres)	Estimated Leachate Generation (inches)[2]	Estimated Leachate Generation (gallons)	
2021	1	16.6	16.6	6.3	2,839,598	0	0.0	0	0	0.0	0	0	0.0	0	2,839,598
2022	2	16.6	16.6	6.3	2,839,598	0	0.0	0	0	0.0	0	0	0.0	0	2,839,598
2023	3	16.6	16.6	6.3	2,839,598	0	0.0	0	0	0.0	0	0	0.0	0	2,839,598
2024	4	16.6	16.6	6.3	2,839,598	0	0.0	0	0	0.0	0	0	0.0	0	2,839,598
2025	5	16.6	16.6	6.3	2,839,598	0	0.0	0	0	0.0	0	0	0.0	0	2,839,598
2026	6	16.6	10.6	6.3	1,813,237	0	0.0	0	6.0	6.3	1,026,361	0	0.0	0	2,839,598
2027	7	16.6	10.6	6.3	1,813,237	0	0.0	0	6.0	4.7	769,771	0	0.0	0	2,583,008
2028	8	16.6	10.6	6.3	1,813,237	0	0.0	0	6.0	3.5	577,328	0	0.0	0	2,390,565
2029	9	16.6	0.0	0.0	0	0	0.0	0	6.0	2.7	432,996	10.6	6.3	1,813,237	2,246,233
2030	10	16.6	0.0	0.0	0	0	0.0	0	6.0	2.0	324,747	10.6	4.7	1,359,928	1,684,675
2031	11	16.6	0.0	0.0	0	0	0.0	0	6.0	1.5	243,560	10.6	3.5	1,019,946	1,263,506
2032	12	16.6	0.0	0.0	0	0	0.0	0	6.0	1.1	182,670	10.6	2.7	764,959	947,630
2033	13	16.6	0.0	0.0	0	0	0.0	0	6.0	1.0	162,914	10.6	2.0	573,720	736,634
2034	14	16.6	0.0	0.0	0	0	0.0	0	6.0	1.0	162,914	10.6	1.5	430,290	593,204
2035	15	16.6	0.0	0.0	0	0	0.0	0	6.0	1.0	162,914	10.6	1.1	322,717	485,632
2036	16	16.6	0.0	0.0	0	0	0.0	0	6.0	1.0	162,914	10.6	1.0	287,815	450,730
2036+	16+	16.6	0.0	0.0	0	0.0	0.0	0	6.0	1.0	162,914	10.6	1.0	287,815	450,730

Notes:
[1] Assumes 11.4 inches of leachate generation for open areas without final cover during initial year of operation and 6.3 inches for all years thereafter.
[2] Assumes a 25% annual reduction following final cover construction, stablizing at 1 inch.

Prepared by: MRS
Checked by: SMB2

Table 7
NELF - Summary of Estimated Leachate Generation Volumes

Year of Operation NELF Operation	Phase 1 (gallons)	Phase 2 (gallons)	Phase 3 (gallons)	Total Leachate Generation (gallons)
2021	3,677,793	2,583,008	2,839,598	9,100,398
2022	3,185,995	2,476,095	2,839,598	8,501,688
2023	2,817,146	2,395,911	2,839,598	8,052,655
2024	2,540,510	2,335,772	2,839,598	7,715,881
2025	2,333,033	2,290,669	2,839,598	7,463,300
2026	2,177,425	2,256,841	2,839,598	7,273,864
2027	1,701,493	2,163,046	2,583,008	6,447,547
2028	1,394,208	2,103,496	2,390,565	5,888,269
2029	1,192,143	2,065,008	2,246,233	5,503,384
2030	972,170	1,565,726	1,684,675	4,222,572
2031	807,191	1,191,265	1,263,506	3,261,962
2032	683,456	910,419	947,630	2,541,505
2033	626,932	706,694	736,634	2,070,260
2034	605,282	557,852	593,204	1,756,338
2035	589,045	446,220	485,632	1,520,897
2036	583,777	410,001	450,730	1,444,508
2036+	583,777	410,001	450,730	1,444,508

Prepared by: MRS
Checked by: SMB2

Table 8
NELF - Estimated Ammonia Generation

Year of Operation NELF Operation	Annual Leachate Generation, gallons	Average Ammonia Concentration (mg/L)	Average Ammonia Concentration (lb/day)
2021	9,100,398	1,663	346.0
2022	8,501,688	1,663	323.2
2023	8,052,655	1,663	306.2
2024	7,715,881	1,663	293.4
2025	7,463,300	1,663	283.8
2026	7,273,864	1,663	276.6
2027	6,447,547	1,663	245.1
2028	5,888,269	1,663	223.9
2029	5,503,384	1,663	209.2
2030	4,222,572	1,663	160.5
2031	3,261,962	1,663	124.0
2032	2,541,505	1,663	96.6
2033	2,070,260	1,663	78.7
2034	1,756,338	1,663	66.8
2035	1,520,897	1,663	57.8
2036	1,444,508	1,663	54.9
2036+	1,444,508	1,663	54.9

Notes:
BOD = biochemical oxygen demand
lb/day = pound per day
mg/L = milligram per liter

Prepared by: MRS
Checked by: SMB2

Table 9
NELF - Estimated BOD Generation

Year of Operation NELF Operation	Annual Leachate Generation, gallons	Average BOD Concentration (mg/L)	Average BOD Concentration (lb/day)
2021	9,100,398	535	111.3
2022	8,501,688	535	104.0
2023	8,052,655	535	98.5
2024	7,715,881	535	94.4
2025	7,463,300	535	91.3
2026	7,273,864	535	89.0
2027	6,447,547	535	78.9
2028	5,888,269	535	72.0
2029	5,503,384	535	67.3
2030	4,222,572	535	51.6
2031	3,261,962	535	39.9
2032	2,541,505	535	31.1
2033	2,070,260	535	25.3
2034	1,756,338	535	21.5
2035	1,520,897	535	18.6
2036	1,444,508	535	17.7
2036+	1,444,508	535	17.7

Notes:
BOD = biochemical oxygen demand
lb/day = pound per day
mg/L = milligram per liter

Prepared by: MRS
Checked by: SMB2

Figures

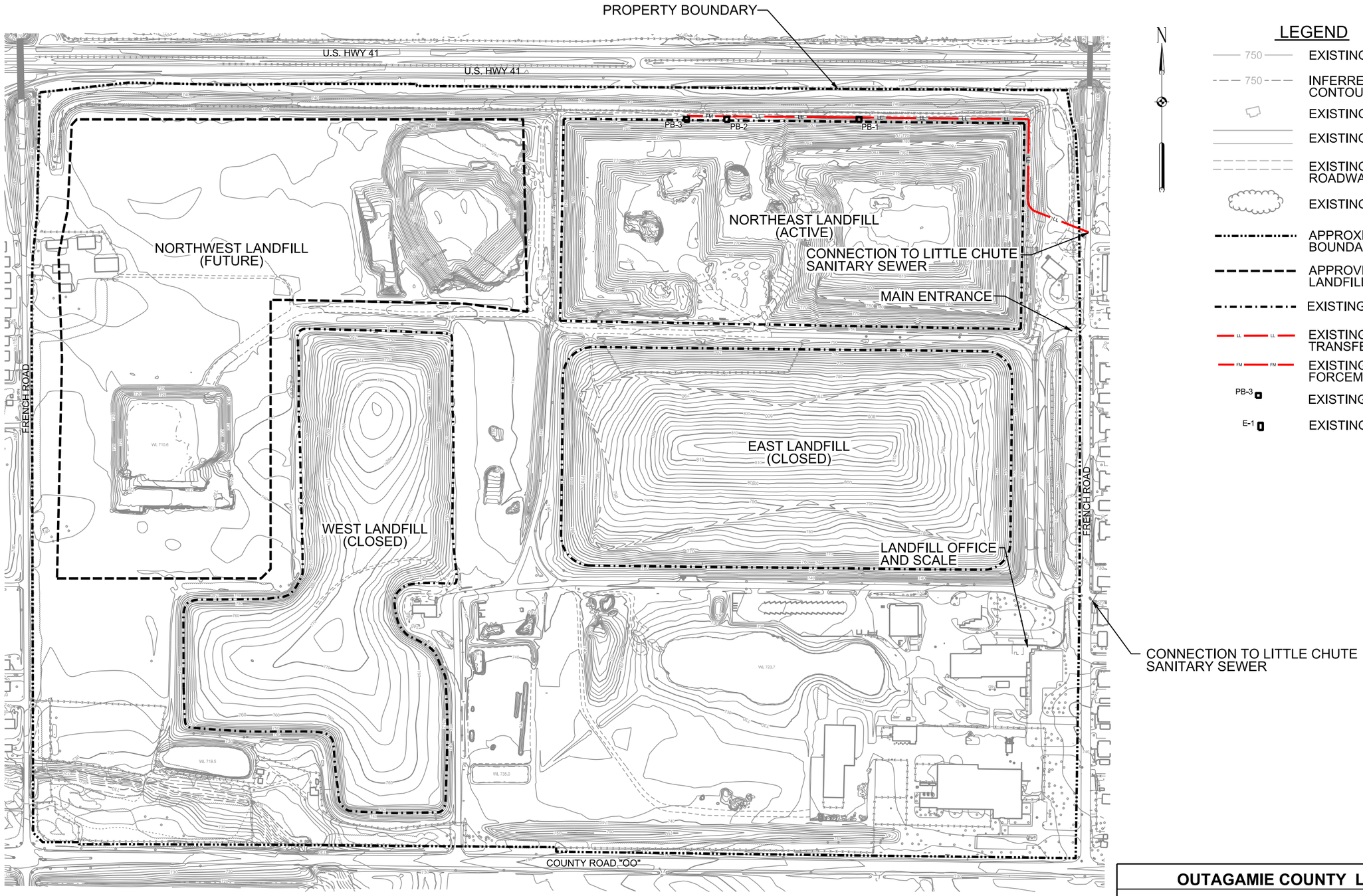

LEGEND

- 750 — EXISTING CONTOUR
- 750 — INFERRED EXISTING CONTOUR
- EXISTING BUILDING
- EXISTING ROADWAY
- EXISTING UNIMPROVED ROADWAY
- EXISTING TREE/BRUSH
- APPROXIMATE PROPERTY BOUNDARY
- APPROVED NORTHWEST LANDFILL WASTE LIMITS
- EXISTING WASTE LIMITS
- LL — EXISTING LEACHATE TRANSFER PIPE
- FM — EXISTING LEACHATE FORCEMAIN PIPE
- PB-3 — EXISTING PUMP BUILDING
- E-1 — EXISTING LIFT STATION

Foth

0' 250' 500'
BAR SCALE

OUTAGAMIE COUNTY LANDFILL

FIGURE 1

EXISTING SITE CONDITIONS

Date: JANUARY, 2022	Revision Date:	
Drawn By: MRS	Checked By: SRB4	Project: 21O002.60

pw:\\foth-pw.bentley.com:foth-pw-01\Documents\Clients\Outagamie Co Recyc SW WI\2021\0021O002.60\CAD\Figures\NELF Leachate Management Analysis\Figure 1 Existing Conditions.dgn
1/21/2022 3:45:39 PM mrs

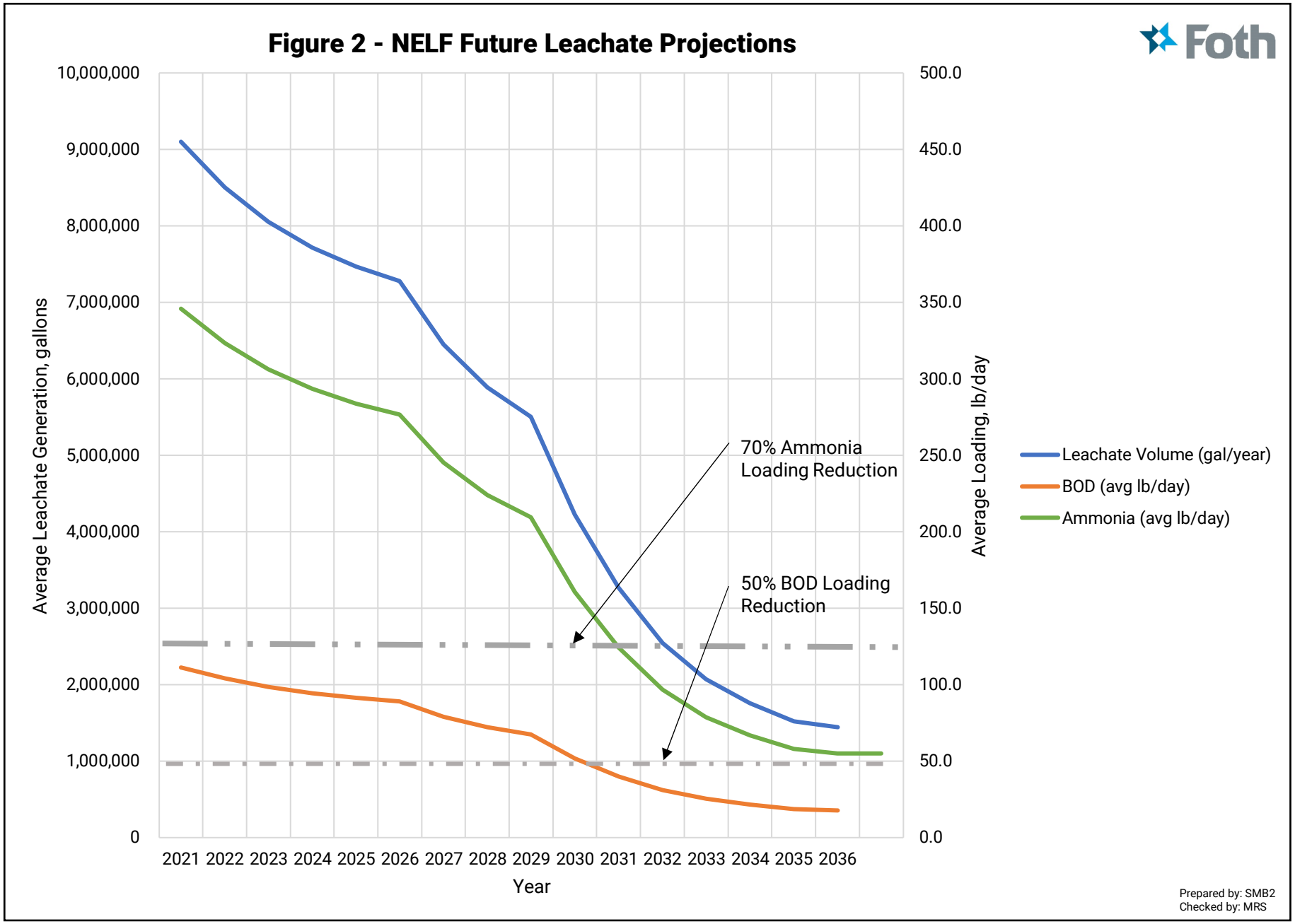

pw:\\foth-pw.bentley.com:foth-pw-01\Documents\Clients\Outagamie Co Recyc SW WI\2021\0021O002.60\10000 Reports\Leachate Model\NELF Leachate Projection Graph

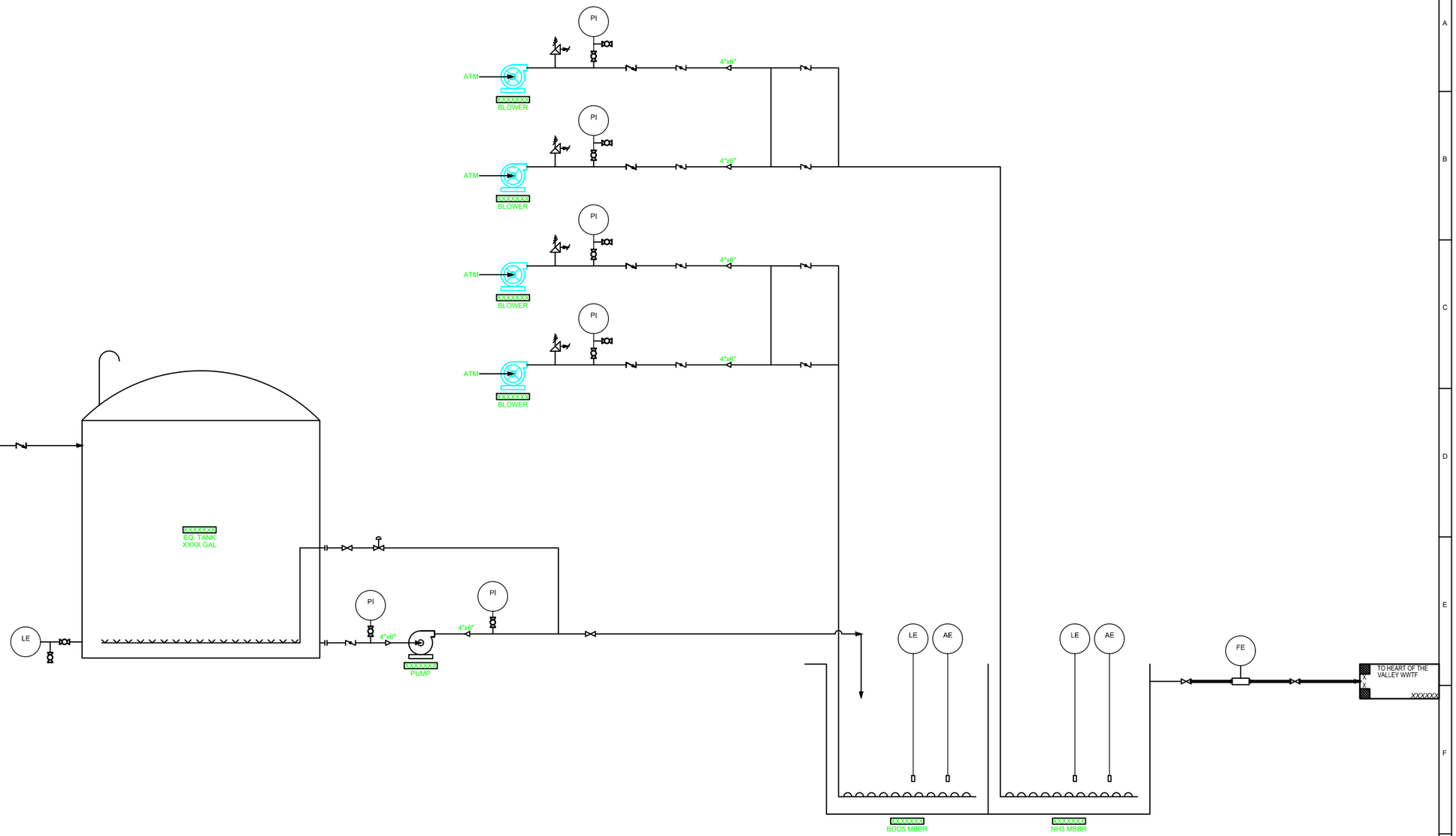

RISK MANAGEMENT NOTES

INDEX	PROTECTIVE SERVICE	EQUIPMENT PROTECTED	HAZARD	PROTECTIVE ACTION

LINE CODING

PIPE TESTING: X= hydpneum; L= service; M= none

PLATFORM NO — INSULATED, EXTERIOR PROTECTED, STRESS ANALYZED, TRACED

2" ABAA – 510 – KNPST

PIPE SIZE — LINE NO. — SERVICE CODE — SPECIAL REQMTS. (OPTIONAL)

VALVES: VENT, 3-WAY, PLUG, GATE, PRESSURE RELIEF, 4-WAY, BUTTERFLY, GLOBE, NEEDLE, BALL, DIAPHRAGM, CHECK

INST. AIR LINE; ELECTRICAL WIRING; CAPILLARY; SOFTWARE LINK; LOGIC DIAGRAM REF.; COMPUTER REF.

CONTROL VALVE (FOR ACTUATED VALVES, SYMBOL DESIGNATES TYPE OF VALVE, NOT OR BUTTERFLY).

FO= FAIL OPEN; FC= FAIL CLOSED; FLP= FAIL LOCKED; FI= FAIL INDETERMINATE

INST. FIELD

AB= AIR BLOW; DC= DRAIN CONN; NB= NITROGEN BLOW; HC= HOSE CONN; SB= STEAM BLOW; SC= SAMPLE CONN; CO= AIR BLOW; TC= TEST CONN; CWO= CHAIN WHEEL OPERATOR

REDUCER-LINE SIZE CHANGE; FLANGES; HOSE OR FLEX CONN.

S=STRAINER; T=TRAP; D=DRYER; F=FILTER; L=LUBRICATION; SS=START UP SCREEN

FLAME ARRESTOR; RUPTURE DISC (VACUUM, PRESSURE); NFPA HAZARD LABEL (F=FIRE, H=HEALTH, R=REACTIVITY/INSTABILITY); MAX. PRESSURE/VACUUM; ENVIRONMENTAL LABEL; PROCESS SAFETY OR COMBUSTION SAFETY LABEL; CENTRIFUGAL PUMP; POSITIVE DISPLACEMENT PUMP/COMPRESSOR; INSULATED EQUIP.; TRACED & INSULATED EQ.

INSTRUMENT TECHNOLOGY

FIRST LETTER	SUCCEEDING LETTERS				
	MEASURED OR INITIATING VARIABLE	MODIFIER	READOUT/PASS FUNCTION	OUTPUT FUNCTION	MODIFIER
A	ANALYSIS/ACCELERATION				
B	FLAME				
C	CONDUCTIVITY			CONTROL(LER)	
D	DENSITY (SP. G.)	DIFFERENTIAL	DISC		
E	VOLTAGE	VOLTAGE	ELEMENT (PRIMARY)		
F	FLOW	RATIO			
G	PRODUCT (GAGING)		GLASS		
H	HAND				HIGH
I	CURRENT	CURRENT	INDICATOR(ING)		
J	POWER	SCAN			
K	TIME	RATE OF CHANGE			
L	LEVEL		LIGHT PILOT	CONTROL STATION	LOW
M	MOISTURE (HUMIDITY)	MOMENTARY			MIDDLE
N	CONSISTENCY				
O	OPACITY (TURBIDITY)	OPTIC	ORIFICE (RESTRICTION)		
P	PRESSURE (VACUUM)	PRESSURE	POINT (TEST POINT)		
Q	QUANTITY (EVENT)	INTEGRATE			
R	RADIATION (RESISTANCE)		RECORD/PRINT		
S	SPEED (FREQUENCY)	SAFETY		SWITCH	
T	TEMPERATURE			TRANSMIT(TER)	
U	MULTIVARIABLE		MULTIFUNCTION	M.F.	M.F.
V	VIBRATION, VISCOSITY			VALVE	
W	WEIGHT (FORCE)		WELL		
X	UNCLASSIFIED	X AXIS			
Y	EVENT, PRESENCE	Y AXIS		RELAY/COMPUTE	
Z	POSITION	Z AXIS		DRIVE, ACTUATOR	

GENERAL NOTES

THIS DRAWING NOT COMPLETE UNLESS NUMBER IN REV. BLOCKS MATCHES DRAWING ISSUE NUMBER AND BOTH SAFETY AND ENVIRONMENTAL CHECK BLOCKS ARE SIGNED BY THE RESPONSIBLE TECH. ENGINEER.

PROCESS SAFETY		DWG REV.#	ENVIRONMENTAL	AIR, DUST AND NOISE	LIQUID & SOLID WASTE	DWG REV.#
( )COMPLETE			( )COMPLETE			
( )NOT REQ'D			( )NOT REQ'D			
DATE			DATE			

Revision History

No	Description	Name/Date
A	ISSUED FOR REVIEW	FOTH C.OSBORNE 12/17/2021

Drawn By:	C. OSBORNE
Date Drawn:	9/8/2021
Checked By:	N. MANNING
Date Checked:	9/8/2021

OUTGAMIE COUNTY
DEPARTMENT OF RECYCLING & SOLID WASTE

OUTAGAMIE COUNTY LANDFILL

FIGURE 3
PRETREATMENT P&ID OPTIONS 1-3

DATE: January, 2022	REV. DATE:
DRAWN BY: C. Osbourne	CHECKED BY: N. Manning
PROJECT NO: 21O002.60	

Foth

Friday, January 21, 2022 12:16:05 PM
DWG Filename: Figure 3.dwg - Layout: options 1-3

N

LEGEND

- PROPERTY BOUNDARY
- LANDFILL WASTE LIMITS
- SS — EXISTING LEACHATE STORM SEWER
- G — EXISTING NATURAL GAS LINE
- GH — EXISTING GAS HEADER PIPE
- OHE — EXISTING OVERHEAD ELECTRIC LINE
- W — EXISTING WATERMAIN
- FM — EXISTING LEACHATE FORCEMAIN PIPE
- LL — EXISTING LEACHATE TRANSFER PIPE
- LL — PROPOSED LEACHATE TRANSFER PIPE
- PROPOSED MANHOLE
- PROPOSED LEACHATE STORAGE TANK/LOADOUT

QUANTITIES (NELF)

DOUBLE ENCASED TRANSFER PIPE	~100'

Foth

0' 150' 300'
BAR SCALE

OUTAGAMIE COUNTY LANDFILL

FIGURE 4

OPTIONS 1, 2 & 3 - HAUL AND TREAT NELF LEACHATE

Date: DECEMBER, 2021	Revision Date:	
Drawn By: MRS	Checked By: SRB4	Project: 21O002.60

pw:\\foth-pw.bentley.com:foth-pw-01\Documents\Clients\Outagamie Co Recyc SW WI\2021\0021O002.60\CAD\Figures\NELF Leachate Management Analysis\Figure 4 Options 1 2 and 3.dgn
1/21/2022 3:54:48 PM mrs

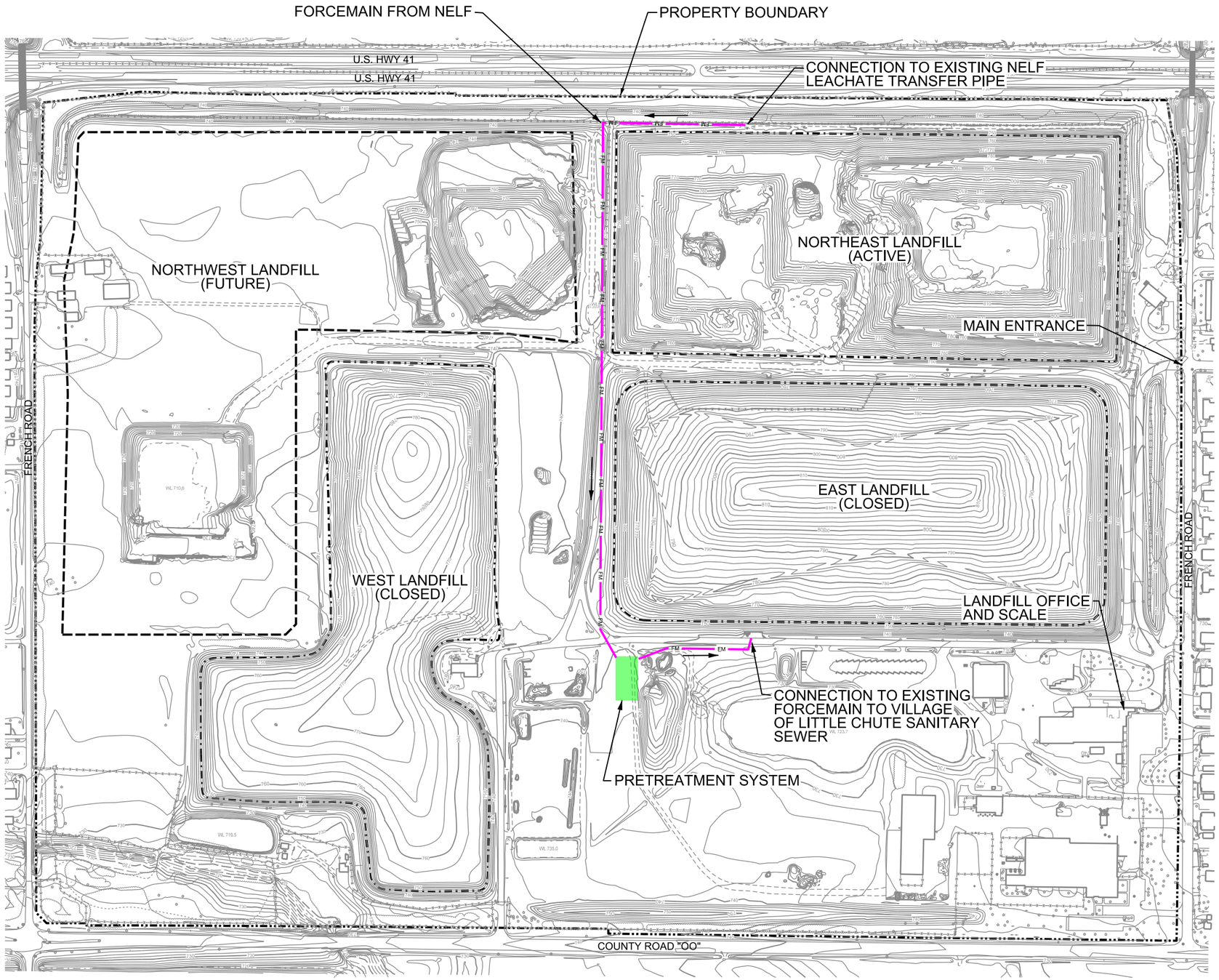

N

LEGEND

- 750 — EXISTING CONTOUR
- 750 — INFERRED EXISTING CONTOUR
- EXISTING BUILDING
- EXISTING ROADWAY
- EXISTING UNIMPROVED ROADWAY
- EXISTING TREE/BRUSH
- APPROXIMATE PROPERTY BOUNDARY
- APPROVED NORTHWEST LANDFILL WASTE LIMITS
- EXISTING WASTE LIMITS
- NWLF PHASE LIMITS
- FM — LEACHATE FORCEMAIN
- FLOW DIRECTION

Foth

0' 250' 500'
BAR SCALE

OUTAGAMIE COUNTY LANDFILL

FIGURE 5

OPTION 4 - 100% PRETREATMENT

Date: JANUARY, 2022	Revision Date:	
Drawn By: MRS	Checked By: SRB4	Project: 21O002.60

pw:\\foth-pw.bentley.com:foth-pw-01\Documents\Clients\Outagamie Co Recyc SW WI\2021\0021O002.60\CAD\Figures\NELF Leachate Management Analysis\Figure 5 Option 4.dgn
1/21/2022 1:58:15 PM mrs

Appendix A

Historical Data, East Landfill, Sunnyview Landfill, and Northeast Landfill

Winnebago County Sunnyview Landfill Historical Data
Lift Station 1-3 BOD, mg/L
2007-2020

Point Name	Sample Date	Biochemical Oxygen Demand (mg/L)
LST-1	3/22/2007	103
LST-3	3/22/2007	25.6
LST-3	6/26/2007	22
LST-1	9/20/2007	92.8
LST-3	9/20/2007	26.1
LST-3	12/13/2007	31.1
LST-1	3/18/2008	77
LST-3	3/18/2008	62.6
LST-3	6/24/2008	65.1
LST-1	9/23/2008	79.2
LST-3	9/23/2008	35.6
LST-3	12/16/2008	677
LST-1	3/19/2009	118
LST-3	3/19/2009	802
LST-3	6/30/2009	44.6
LST-1	9/24/2009	127
LST-3	9/24/2009	45.3
LST-3	12/15/2009	34
LST-1	3/16/2010	120
LST-3	3/16/2010	84.3
LST-3	6/22/2010	34.3
LST-1	9/28/2010	147
LST-3	9/28/2010	42
LST-3	12/14/2010	31.3
LST-1	3/17/2011	144
LST-3	3/17/2011	< 20
LST-1	6/30/2011	110
LST-3	6/30/2011	22.2
LST-1	10/5/2011	127
LST-3	10/5/2011	31.8
LST-1	12/14/2011	122
LST-3	12/14/2011	29.1
LST-1	3/20/2012	104
LST-3	3/20/2012	89
LST-1	6/13/2012	105
LST-1	6/13/2012	
LST-3	6/13/2012	< 17.1
LST-1	9/18/2012	119
LST-3	9/18/2012	16.8
LST-1	12/13/2012	668
LST-3	12/13/2012	18.8
LST-1	3/20/2013	592
LST-3	3/20/2013	119
LST-1	6/26/2013	152
LST-3	6/26/2013	19.5
LST-1	9/12/2013	228
LST-3	9/12/2013	16.6
LST-1	12/17/2013	87.9
LST-3	12/17/2013	16.6
LST-1	3/25/2014	< 100
LST-3	3/25/2014	22.6

Winnebago County Sunnyview Landfill Historical Data
Lift Station 1-3 BOD, mg/L
2007-2020

Point Name	Sample Date	Biochemical Oxygen Demand (mg/L)
LST-1	6/27/2014	204
LST-3	6/27/2014	31.2
LST-1	9/23/2014	150
LST-3	9/23/2014	17.3
LST-1	12/16/2014	141
LST-3	12/16/2014	141
LST-1	3/25/2015	125
LST-3	3/25/2015	23.1
LST-1	6/25/2015	75.6
LST-3	6/25/2015	14.2
LS-1	9/24/2015	216
LS-2	9/24/2015	15.2
LS-1	12/16/2015	2040
LS-2	12/16/2015	136
LS-1	3/16/2016	< 200
LS-2	3/16/2016	448
LS-1	6/22/2016	6910
LS-2	6/22/2016	64.4
LS-1	9/21/2016	19500
LS-2	9/21/2016	102
LS-1	12/20/2016	2000
LS-2	12/20/2016	50.3
LS-1	3/20/2017	< 200
LS-2	3/20/2017	35.2
LS-1	10/3/2017	361
LS-2	10/3/2017	65.7
LS-1	3/13/2018	661
LS-2	3/13/2018	33.9
LS-1	10/2/2018	1800
LS-2	10/2/2018	37
LS-1	3/19/2019	< 1000
LS-2	3/19/2019	22.7
LS-1	9/25/2019	1270
LS-2	9/25/2019	27.4
LS-1	3/11/2020	< 200
LS-2	3/11/2020	33.4
LS-1	9/22/2020	696
LS-2	9/22/2020	32.2

Notes:
Data downloaded from WDNR GEMS database
Outliers and non detect flags highlighted in yellow.

Prepared by: SMB2
Checked by: MRS

Winnebago County Sunnyview Landfill Historical Data
Lift Station 4-6 BOD, mg/L
2007-2020

Point Name	Sample Date	Biochemical Oxygen Demand (mg/L, 5 ay - 20DEG C)
LEB-4	3/22/2007	67
LEB-5	3/22/2007	789
LEB-4	6/26/2007	136
LEB-4	6/26/2007	136
LEB-4	9/20/2007	82.6
LEB-6	9/20/2007	181
LEB-4	12/13/2007	91.8
LEB-5	12/13/2007	59.2
LEB-6	12/13/2007	162
LEB-4	3/18/2008	63.1
LEB-5	3/18/2008	880
LEB-6	3/18/2008	12500
LEB-4	9/25/2008	60.3
LEB-5	9/25/2008	141
LEB-6	9/25/2008	33200
LEB-4	12/16/2008	75.6
LEB-5	12/16/2008	163
LEB-6	12/16/2008	13500
LEB-4	3/19/2009	60.8
LEB-5	3/19/2009	141
LEB-6	3/19/2009	10000
LEB-4	6/30/2009	81
LEB-5	6/30/2009	162
LEB-6	6/30/2009	20000
LEB-4	9/24/2009	63.9
LEB-5	9/24/2009	163
LEB-6	9/24/2009	15900
LEB-4	12/15/2009	66
LEB-5	12/15/2009	156
LEB-6	12/15/2009	10200
LEB-4	3/16/2010	72.3
LEB-5	3/16/2010	271
LEB-6	3/16/2010	5110
LEB-4	6/22/2010	66.9
LEB-5	6/22/2010	1240
LEB-6	6/22/2010	9250
LEB-5	9/23/2010	300
LEB-6	9/23/2010	1800
LEB-4	9/30/2010	67.2
LEB-4	12/14/2010	90.6
LEB-5	12/14/2010	750
LEB-6	12/14/2010	1880
LEB-4	3/17/2011	96
LEB-5	3/17/2011	312
LEB-6	3/17/2011	900
LEB-4	6/30/2011	426
LEB-5	6/30/2011	253
LEB-6	6/30/2011	482
LEB-4	10/5/2011	124
LEB-5	10/5/2011	430

Winnebago County Sunnyview Landfill Historical Data
Lift Station 4-6 BOD, mg/L
2007-2020

Point Name	Sample Date	Biochemical Oxygen Demand (mg/L, 5 ay - 20DEG C)
LEB-6	10/5/2011	480
LEB-4	12/14/2011	215
LEB-5	12/14/2011	1130
LEB-6	12/14/2011	522
LEB-4	6/13/2012	531
LEB-5	6/13/2012	969
LEB-6	6/13/2012	467
LEB-4	9/18/2012	229
LEB-5	9/18/2012	548
LEB-6	9/18/2012	500
LEB-4	12/13/2012	171
LEB-5	12/13/2012	1730
LEB-6	12/13/2012	3770
LEB-4	3/20/2013	102
LEB-5	3/20/2013	1900
LEB-6	3/20/2013	952
LEB-4	6/26/2013	89.5
LEB-5	6/26/2013	3600
LEB-6	6/26/2013	1130
LEB-4	9/12/2013	124
LEB-5	9/12/2013	681
LEB-6	12/17/2013	1430
LEB-5	3/25/2014	478
LEB-6	3/25/2014	1060
LEB-4	6/26/2014	159
LEB-5	6/26/2014	1050
LEB-6	6/26/2014	962
LEB-4	9/23/2014	109
LEB-5	9/23/2014	790
LEB-6	9/23/2014	1190
LEB-4	12/16/2014	66.5
LEB-5	12/16/2014	627
LEB-6	12/16/2014	3670
LEB-4	3/25/2015	86.7
LEB-5	3/25/2015	382
LEB-6	3/25/2015	2820
LEB-4	6/25/2015	82.7
LEB-5	6/25/2015	718
LEB-6	6/25/2015	1620
LEB-4	9/24/2015	66.5
LEB-5	9/24/2015	509
LEB-6	9/24/2015	19100
LEB-4	12/16/2015	59.4
LEB-5	12/16/2015	872
LEB-6	12/16/2015	9750
LEB-4	3/16/2016	81.3
LEB-5	3/16/2016	423
LEB-6	3/16/2016	3000
LEB-4	6/22/2016	76.9
LEB-5	6/22/2016	534

Winnebago County Sunnyview Landfill Historical Data
Lift Station 4-6 BOD, mg/L
2007-2020

Point Name	Sample Date	Biochemical Oxygen Demand (mg/L, 5 ay - 20DEG C)
LEB-6	6/22/2016	1010
LEB-4	9/21/2016	89.3
LEB-5	9/21/2016	844
LEB-6	9/21/2016	1510
LEB-5	12/20/2016	642
LEB-6	12/20/2016	629
LEB-5	3/6/2017	453
LEB-6	3/6/2017	1520
LEB-4	10/3/2017	44.2
LEB-5	10/3/2017	424
LEB-6	10/3/2017	12700
LEB-4	3/13/2018	70.2
LEB-5	3/13/2018	416
LEB-6	3/13/2018	1590
LEB-4	10/2/2018	82.7
LEB-5	10/2/2018	347
LEB-6	10/2/2018	2960
LEB-4	3/19/2019	58.4
LEB-5	3/19/2019	427
LEB-6	3/19/2019	975
LEB-4	9/25/2019	78.6
LEB-5	9/25/2019	311
LEB-6	9/25/2019	844
LEB-4	3/11/2020	57.5
LEB-5	3/11/2020	393
LEB-6	3/11/2020	554
LEB-4	9/22/2020	45
LEB-5	9/22/2020	1100
LEB-6	9/22/2020	1250

Notes:
Data downloaded from WDNR GEMS database
Outliers and non detect flags highlighted in yellow.

Prepared by: SMB2
Checked by: MRS

Winnebago County Sunnyview Landfill Historical Data
Lift Station 1-3 Nitrogen, Ammonia, mg/L
2007-2020

Point Name	Sample Date	Nitrogen, Ammonia, Dissolved (mg/L as N)
LST-1	3/22/2007	346
LST-3	3/22/2007	110
LST-3	6/26/2007	318
LST-1	9/20/2007	377
LST-3	9/20/2007	357
LST-3	12/13/2007	426
LST-1	3/18/2008	282
LST-3	3/18/2008	122
LST-3	6/24/2008	197
LST-1	9/23/2008	335
LST-3	9/23/2008	345
LST-3	12/16/2008	293
LST-1	3/19/2009	316
LST-3	3/19/2009	182
LST-3	6/30/2009	228
LST-1	9/24/2009	369
LST-3	9/24/2009	380
LST-3	12/15/2009	441
LST-1	3/16/2010	317
LST-3	3/16/2010	120
LST-3	6/22/2010	307
LST-1	9/28/2010	343
LST-3	9/28/2010	368
LST-3	12/14/2010	383
LST-1	3/17/2011	327
LST-3	3/17/2011	22.4
LST-1	6/30/2011	355
LST-3	6/30/2011	411
LST-1	10/5/2011	348
LST-3	10/5/2011	375
LST-1	12/14/2011	332
LST-3	12/14/2011	267
LST-1	3/20/2012	347
LST-3	3/20/2012	223
LST-1	6/13/2012	384
LST-3	6/13/2012	292
LST-1	9/18/2012	398
LST-3	9/18/2012	328
LST-1	12/13/2012	608
LST-3	12/13/2012	379
LST-1	3/20/2013	424
LST-3	3/20/2013	192
LST-1	6/26/2013	423
LST-3	6/26/2013	231
LST-1	9/12/2013	588
LST-3	9/12/2013	288
LST-1	12/17/2013	332
LST-3	12/17/2013	345
LST-1	3/25/2014	354
LST-3	3/25/2014	167

Winnebago County Sunnyview Landfill Historical Data
Lift Station 1-3 Nitrogen, Ammonia, mg/L
2007-2020

Point Name	Sample Date	Nitrogen, Ammonia, Dissolved (mg/L as N)
LST-1	6/27/2014	395
LST-3	6/27/2014	122
LST-1	9/23/2014	380
LST-3	9/23/2014	297
LST-1	12/16/2014	259
LST-3	12/16/2014	105
LST-1	3/25/2015	342
LST-3	3/25/2015	341
LST-1	6/25/2015	215
LST-3	6/25/2015	164
LS-1	9/24/2015	364
LS-2	9/24/2015	229
LS-1	12/16/2015	533
LS-2	12/16/2015	120
LS-1	3/16/2016	549
LS-2	3/16/2016	151
LS-1	6/22/2016	1680
LS-2	6/22/2016	249
LS-1	9/21/2016	1620
LS-2	9/21/2016	40.6
LS-1	12/20/2016	460
LS-2	12/20/2016	285
LS-1	3/20/2017	357
LS-2	3/20/2017	177
LS-1	10/3/2017	457
LS-2	10/3/2017	372
LS-1	3/13/2018	526
LS-2	3/13/2018	354
LS-1	10/2/2018	556
LS-2	10/2/2018	459
LS-1	3/19/2019	321
LS-2	3/19/2019	453
LS-1	9/25/2019	415
LS-2	9/25/2019	466
LS-1	3/11/2020	281
LS-2	3/11/2020	520
LS-1	9/22/2020	520
LS-2	9/22/2020	469

Notes:
Data downloaded from WDNR GEMS database
Outliers and non detect flags highlighted in yellow.

Prepared by: SMB2
Checked by: MRS

Winnebago County Sunnyview Landfill Historical Data
Lift Station 4-6 Nitrogen, Ammonia, mg/L
2007-2020

Point Name	Sample Date	Nitrogen, Ammonia, Dissolved (mg/L as N)
LEB-4	3/22/2007	416
LEB-5	3/22/2007	154
LEB-4	6/26/2007	650
LEB-4	9/20/2007	625
LEB-6	9/20/2007	5.12
LEB-4	12/13/2007	645
LEB-5	12/13/2007	290
LEB-6	12/13/2007	45.8
LEB-4	3/18/2008	276
LEB-5	3/18/2008	260
LEB-6	3/18/2008	495
LEB-4	9/25/2008	590
LEB-5	9/25/2008	620
LEB-6	9/25/2008	1200
LEB-4	12/16/2008	498
LEB-5	12/16/2008	680
LEB-6	12/16/2008	605
LEB-4	3/19/2009	349
LEB-5	3/19/2009	384
LEB-6	3/19/2009	344
LEB-4	6/30/2009	510
LEB-5	6/30/2009	620
LEB-6	6/30/2009	1220
LEB-4	9/24/2009	530
LEB-5	9/24/2009	822
LEB-6	9/24/2009	1630
LEB-4	12/15/2009	575
LEB-5	12/15/2009	847
LEB-6	12/15/2009	1480
LEB-4	3/16/2010	484
LEB-5	3/16/2010	730
LEB-6	3/16/2010	914
LEB-4	6/22/2010	540
LEB-5	6/22/2010	988
LEB-6	6/22/2010	1200
LEB-4	9/23/2010	658
LEB-5	9/23/2010	1200
LEB-6	9/23/2010	1760
LEB-4	12/14/2010	637
LEB-5	12/14/2010	1550
LEB-6	12/14/2010	1840
LEB-4	3/17/2011	570
LEB-5	3/17/2011	1030
LEB-6	3/17/2011	543
LEB-4	6/30/2011	748
LEB-5	6/30/2011	909
LEB-6	6/30/2011	1080
LEB-4	10/5/2011	756
LEB-5	10/5/2011	1940
LEB-6	10/5/2011	1880

Winnebago County Sunnyview Landfill Historical Data
Lift Station 4-6 Nitrogen, Ammonia, mg/L
2007-2020

Point Name	Sample Date	Nitrogen, Ammonia, Dissolved (mg/L as N)
LEB-4	12/14/2011	778
LEB-5	12/14/2011	1750
LEB-6	12/14/2011	1440
LEB-4	6/13/2012	827
LEB-5	6/13/2012	2030
LEB-6	6/13/2012	1470
LEB-4	9/18/2012	958
LEB-5	9/18/2012	1380
LEB-6	9/18/2012	1680
LEB-4	12/13/2012	855
LEB-5	12/13/2012	1930
LEB-6	12/13/2012	1630
LEB-4	3/20/2013	595
LEB-5	3/20/2013	1900
LEB-6	3/20/2013	1160
LEB-4	6/26/2013	596
LEB-5	6/26/2013	1930
LEB-6	6/26/2013	1350
LEB-4	9/12/2013	670
LEB-5	9/12/2013	1630
LEB-6	9/12/2013	1270
LEB-4	12/17/2013	695
LEB-5	12/17/2013	2130
LEB-6	12/17/2013	1020
LEB-4	3/25/2014	550
LEB-5	3/25/2014	1430
LEB-6	3/25/2014	1190
LEB-4	6/26/2014	516
LEB-5	6/26/2014	1570
LEB-6	6/26/2014	1250
LEB-4	9/23/2014	669
LEB-5	9/23/2014	1630
LEB-6	9/23/2014	1320
LEB-4	12/16/2014	399
LEB-5	12/16/2014	1510
LEB-6	12/16/2014	1480
LEB-4	3/25/2015	535
LEB-5	3/25/2015	1170
LEB-6	3/25/2015	1070
LEB-4	6/25/2015	484
LEB-5	6/25/2015	1220
LEB-6	6/25/2015	1190
LEB-4	9/24/2015	596
LEB-5	9/24/2015	1500
LEB-6	9/24/2015	1530
LEB-4	12/16/2015	297
LEB-5	12/16/2015	1620
LEB-6	12/16/2015	1550
LEB-4	3/16/2016	445
LEB-5	3/16/2016	1540

Winnebago County Sunnyview Landfill Historical Data
Lift Station 4-6 Nitrogen, Ammonia, mg/L
2007-2020

Point Name	Sample Date	Nitrogen, Ammonia, Dissolved (mg/L as N)
LEB-6	3/16/2016	1340
LEB-4	6/22/2016	464
LEB-5	6/22/2016	1700
LEB-6	6/22/2016	1540
LEB-4	9/21/2016	492
LEB-5	9/21/2016	1400
LEB-6	9/21/2016	1180
LEB-4	12/20/2016	217
LEB-5	12/20/2016	1370
LEB-6	12/20/2016	1460
LEB-4	3/6/2017	139
LEB-5	3/6/2017	1020
LEB-6	3/6/2017	1090
LEB-4	10/3/2017	298
LEB-5	10/3/2017	1890
LEB-6	10/3/2017	1970
LEB-4	3/13/2018	534
LEB-5	3/13/2018	1840
LEB-6	3/13/2018	1600
LEB-4	10/2/2018	566
LEB-5	10/2/2018	1750
LEB-6	10/2/2018	1920
LEB-4	3/19/2019	347
LEB-5	3/19/2019	1810
LEB-6	3/19/2019	1610
LEB-4	9/25/2019	673
LEB-5	9/25/2019	1800
LEB-6	9/25/2019	1580
LEB-4	3/11/2020	455
LEB-5	3/11/2020	1880
LEB-6	3/11/2020	1570
LEB-4	9/22/2020	300
LEB-5	9/22/2020	1800
LEB-6	9/22/2020	1490

Notes:

Data downloaded from WDNR GEMS database

Outliers and non detect flags highlighted in yellow.

Prepared by: SMB2

Checked by: MRS

Winnebago County Sunnyview Landfill Historical Data
Lift Station 1-3 Leachate Volume Pumped, KGallons
2007-2020

Point Name	Sample Date	Leachate, Volume Pumped (1000 gallons kgal)
LST-1	1/29/2007	120.03
LST-3	1/29/2007	903.381
LST-1	2/28/2007	105.87
LST-3	2/28/2007	312
LST-1	3/30/2007	101.53
LST-3	3/30/2007	829.26
LST-1	4/30/2007	122.14
LST-3	4/30/2007	765.793
LST-1	5/29/2007	86.08
LST-3	5/29/2007	504.041
LST-1	6/25/2007	81.68
LST-3	6/25/2007	188.473
LST-1	7/30/2007	125.99
LST-3	7/30/2007	156.6
LST-1	8/30/2007	101.95
LST-3	8/30/2007	238.5
LST-1	9/28/2007	99.3
LST-3	9/28/2007	290.25
LST-1	10/31/2007	109.9
LST-3	10/31/2007	667.147
LST-1	11/26/2007	92.52
LST-3	11/26/2007	169.63
LST-1	1/3/2008	128.68
LST-3	1/3/2008	425.015
LST-1	1/31/2008	89.24
LST-3	1/31/2008	568.131
LST-1	2/29/2008	836.927
LST-3	2/29/2008	62.52
LST-1	3/31/2008	102.34
LST-3	3/31/2008	1499.217
LST-1	4/30/2008	116.14
LST-3	4/30/2008	1884.303
LST-1	5/27/2008	173.37
LST-3	5/27/2008	501.543
LST-1	6/30/2008	172.95
LST-3	6/30/2008	1747.175
LST-1	8/4/2008	125.33
LST-3	8/4/2008	355.05
LST-1	9/2/2008	91.42
LST-3	9/2/2008	231.803
LST-1	9/30/2008	94.14
LST-3	9/30/2008	187.814
LST-1	10/29/2008	105.34
LST-3	10/29/2008	181.32
LST-1	12/1/2008	113.76
LST-3	12/1/2008	198.205
LST-1	1/5/2009	100.65
LST-3	1/5/2009	362.897

Winnebago County Sunnyview Landfill Historical Data
Lift Station 1-3 Leachate Volume Pumped, KGallons
2007-2020

Point Name	Sample Date	Leachate, Volume Pumped (1000 gallons kgal)
LST-1	1/30/2009	76.57
LST-3	1/30/2009	239.472
LST-1	2/27/2009	97.09
LST-3	2/27/2009	395.343
LST-1	3/31/2009	115.85
LST-3	3/31/2009	1020.808
LST-1	4/30/2009	105.93
LST-3	4/30/2009	868.223
LST-1	5/28/2009	117.85
LST-3	5/28/2009	689.825
LST-1	6/30/2009	100.81
LST-3	6/30/2009	760.177
LST-1	7/31/2009	121.73
LST-3	7/31/2009	420.727
LST-1	8/31/2009	95.48
LST-3	8/31/2009	461.996
LST-1	9/28/2009	75.78
LST-3	9/28/2009	301.927
LST-1	10/28/2009	101.98
LST-3	10/28/2009	385.921
LST-1	11/30/2009	75.34
LST-3	11/30/2009	440.587
LST-1	1/4/2010	128.4
LST-3	1/4/2010	426.046
LST-1	1/29/2010	95.99
LST-3	1/29/2010	336.987
LST-1	2/26/2010	97.4
LST-3	2/26/2010	260.409
LST-1	3/31/2010	129.2
LST-3	3/31/2010	774.071
LST-1	4/30/2010	132.07
LST-3	4/30/2010	620.026
LST-1	5/28/2010	118.08
LST-3	5/28/2010	399.628
LST-1	6/30/2010	126.59
LST-3	6/30/2010	423.53
LST-1	7/29/2010	124.54
LST-3	7/29/2010	1361.619
LST-1	8/31/2010	139.42
LST-3	8/31/2010	420.217
LST-1	9/30/2010	127.12
LST-3	9/30/2010	229.098
LST-1	10/31/2010	116.97
LST-3	10/31/2010	268.054
LST-1	11/30/2010	112.3
LST-3	11/30/2010	207.435
LST-1	12/31/2010	111.73
LST-3	12/31/2010	253.031

Winnebago County Sunnyview Landfill Historical Data
Lift Station 1-3 Leachate Volume Pumped, KGallons
2007-2020

Point Name	Sample Date	Leachate, Volume Pumped (1000 gallons kgal)
LST-1	1/31/2011	99.46
LST-3	1/31/2011	196.427
LST-1	2/28/2011	108.11
LST-3	2/28/2011	367.071
LST-1	3/31/2011	111.8
LST-3	3/31/2011	853.117
LST-1	4/30/2011	137.09
LST-3	4/30/2011	1559.792
LST-1	5/31/2011	155.03
LST-3	5/31/2011	478.436
LST-1	6/30/2011	133.71
LST-3	6/30/2011	285.409
LST-1	7/31/2011	118.59
LST-3	7/31/2011	354.341
LST-1	8/31/2011	142.53
LST-3	8/31/2011	215.837
LST-1	9/30/2011	118.5
LST-3	9/30/2011	169.756
LST-1	10/31/2011	121.28
LST-1	10/31/2011	142.89
LST-3	10/31/2011	165.498
LST-3	10/31/2011	575.319
LST-1	12/14/2011	170.56
LST-3	12/14/2011	399.281
LST-1	1/31/2012	120.12
LST-3	1/31/2012	178.753
LST-1	2/29/2012	125.26
LST-3	2/29/2012	236.88
LST-1	3/31/2012	139.29
LST-3	3/31/2012	712.721
LST-1	4/30/2012	119.1
LST-3	4/30/2012	581.515
LST-1	5/31/2012	153.48
LST-3	5/31/2012	1402.425
LST-1	6/13/2012	137.3
LST-3	6/13/2012	232.373
LST-1	7/31/2012	133.76
LST-3	7/31/2012	210.566
LST-1	8/31/2012	133.58
LST-3	8/31/2012	216.176
LST-1	9/30/2012	139.98
LST-3	9/30/2012	169.04
LST-1	10/31/2012	158.36
LST-3	10/31/2012	557.318
LST-1	11/30/2012	234.79
LST-3	11/30/2012	221.528
LST-1	12/13/2012	201.51
LST-3	12/13/2012	205.832

Winnebago County Sunnyview Landfill Historical Data
Lift Station 1-3 Leachate Volume Pumped, KGallons
2007-2020

Point Name	Sample Date	Leachate, Volume Pumped (1000 gallons kgal)
LST-1	1/31/2013	169.83
LST-3	1/31/2013	431.433
LST-1	2/28/2013	161.87
LST-3	2/28/2013	350.844
LST-1	3/31/2013	176.95
LST-3	3/31/2013	998.313
LST-1	4/29/2013	213.77
LST-3	4/29/2013	1045.95
LST-1	5/28/2013	165.58
LST-3	5/28/2013	473.018
LST-1	6/26/2013	192.81
LST-3	6/26/2013	442.731
LST-1	7/31/2013	142.96
LST-3	7/31/2013	244.774
LST-1	8/30/2013	163.92
LST-3	8/30/2013	171.565
LST-1	9/30/2013	216.6
LST-3	9/30/2013	168.582
LST-1	10/31/2013	122.96
LST-3	10/31/2013	152.617
LST-1	11/30/2013	180.65
LST-3	11/30/2013	330.271
LST-1	12/17/2013	150.55
LST-3	12/17/2013	197.11
LST-1	1/31/2014	135.53
LST-3	1/31/2014	155.497
LST-1	2/28/2014	128.79
LST-3	2/28/2014	146.657
LST-1	3/31/2014	135.95
LST-3	3/31/2014	564.402
LST-1	4/30/2014	201.64
LST-3	4/30/2014	1462.279
LST-1	5/31/2014	243.63
LST-3	5/31/2014	843.887
LST-1	6/30/2014	89.4
LST-3	6/30/2014	1020.773
LST-1	7/31/2014	159.75
LST-3	7/31/2014	313.232
LST-1	8/31/2014	128.84
LST-3	8/31/2014	224.475
LST-1	9/30/2014	119.91
LST-3	9/30/2014	439.78
LST-1	10/31/2014	164.43
LST-3	10/31/2014	363.151
LST-1	11/30/2014	104.88
LST-3	11/30/2014	205.596
LST-1	12/31/2014	155.55
LST-3	12/31/2014	459.949

Winnebago County Sunnyview Landfill Historical Data
Lift Station 1-3 Leachate Volume Pumped, KGallons
2007-2020

Point Name	Sample Date	Leachate, Volume Pumped (1000 gallons kgal)
LST-1	1/31/2015	114.72
LST-3	1/31/2015	216.95
LST-1	2/28/2015	104.11
LST-3	2/28/2015	176.769
LST-1	3/31/2015	124.56
LST-3	3/31/2015	193.411
LST-1	4/30/2015	150.35
LST-3	4/30/2015	654.623
LST-1	5/31/2015	107.73
LST-3	5/31/2015	217.961
LST-1	6/30/2015	123.37
LST-3	6/30/2015	608.387
LST-1	7/31/2015	196.834
LST-3	7/31/2015	228.93
LS-1	8/31/2015	144.144
LS-2	8/31/2015	185.538
LS-1	9/30/2015	173
LS-2	9/30/2015	359
LS-1	10/31/2015	103
LS-2	10/31/2015	271
LS-1	11/30/2015	118
LS-2	11/30/2015	349
LS-1	12/31/2015	189
LS-2	12/31/2015	493
LS-1	1/30/2016	134
LS-2	1/30/2016	360
LS-1	2/29/2016	112
LS-2	2/29/2016	365
LS-1	3/31/2016	193
LS-2	3/31/2016	566
LS-1	4/30/2016	204
LS-2	4/30/2016	501
LS-1	5/31/2016	154
LS-2	5/31/2016	355
LS-1	6/30/2016	141
LS-2	6/30/2016	424
LS-1	7/31/2016	129
LS-2	7/31/2016	446
LS-1	8/31/2016	120
LS-2	8/31/2016	280
LS-1	9/30/2016	111
LS-2	9/30/2016	351
LS-1	10/31/2016	101
LS-2	10/31/2016	363
LS-1	11/30/2016	98
LS-2	11/30/2016	318
LS-1	12/31/2016	112
LS-2	12/31/2016	369

Winnebago County Sunnyview Landfill Historical Data
Lift Station 1-3 Leachate Volume Pumped, KGallons
2007-2020

Point Name	Sample Date	Leachate, Volume Pumped (1000 gallons kgal)
LS-1	1/31/2017	104
LS-2	1/31/2017	456
LS-1	2/28/2017	109
LS-2	2/28/2017	368
LS-1	3/31/2017	148
LS-2	3/31/2017	445
LS-1	4/30/2017	205
LS-2	4/30/2017	488
LS-1	5/31/2017	176
LS-2	5/31/2017	392
LS-1	6/30/2017	149
LS-2	6/30/2017	376
LS-1	7/31/2017	135
LS-2	7/31/2017	296
LS-1	8/31/2017	123
LS-2	8/31/2017	275
LS-1	9/30/2017	115
LS-2	9/30/2017	294
LS-1	10/31/2017	90
LS-2	10/31/2017	224
LS-1	11/30/2017	85
LS-2	11/30/2017	199
LS-1	12/31/2017	81
LS-2	12/31/2017	199
LS-1	1/31/2018	82
LS-2	1/31/2018	166
LS-1	2/28/2018	68
LS-2	2/28/2018	146
LS-1	3/31/2018	78
LS-2	3/31/2018	161
LS-1	4/30/2018	84
LS-2	4/30/2018	133
LS-1	5/31/2018	147
LS-2	5/31/2018	152
LS-1	6/30/2018	108
LS-2	6/30/2018	142
LS-1	7/31/2018	87
LS-2	7/31/2018	144
LS-1	8/31/2018	87
LS-2	8/31/2018	148
LS-1	9/30/2018	115
LS-2	9/30/2018	159
LS-1	10/31/2018	128
LS-2	10/31/2018	142
LS-1	11/30/2018	114
LS-2	11/30/2018	134
LS-1	12/31/2018	125
LS-2	12/31/2018	142

Winnebago County Sunnyview Landfill Historical Data
Lift Station 1-3 Leachate Volume Pumped, KGallons
2007-2020

Point Name	Sample Date	Leachate, Volume Pumped (1000 gallons kgal)
LS-1	1/31/2019	102
LS-2	1/31/2019	125
LS-1	2/28/2019	100
LS-2	2/28/2019	115
LS-1	3/31/2019	107
LS-2	3/31/2019	134
LS-1	4/30/2019	130
LS-2	4/30/2019	116
LS-1	5/31/2019	188
LS-2	5/31/2019	118
LS-1	6/30/2019	153
LS-2	6/30/2019	120
LS-1	7/31/2019	125
LS-2	7/31/2019	109
LS-1	8/31/2019	122
LS-2	8/31/2019	124
LS-1	9/30/2019	108
LS-2	9/30/2019	111
LS-1	10/31/2019	136
LS-2	10/31/2019	114
LS-1	11/30/2019	148
LS-2	11/30/2019	113
LS-1	12/31/2019	140
LS-2	12/31/2019	96
LS-1	1/31/2020	148
LS-2	1/31/2020	105
LS-1	2/29/2020	122
LS-2	2/29/2020	100
LS-1	3/31/2020	138
LS-2	3/31/2020	95
LS-1	4/30/2020	152
LS-2	4/30/2020	96
LS-1	5/31/2020	119
LS-2	5/31/2020	89
LS-1	6/30/2020	147
LS-2	6/30/2020	100
LS-1	7/31/2020	140
LS-2	7/31/2020	110
LS-1	8/31/2020	107
LS-2	8/31/2020	88
LS-1	9/30/2020	106
LS-2	9/30/2020	88
LS-1	10/31/2020	89
LS-2	10/31/2020	85
LS-1	11/30/2020	106
LS-2	11/30/2020	85
LS-1	12/31/2020	95
LS-2	12/31/2020	74

Winnebago County Sunnyview Landfill Historical Data
Lift Station 1-3 Leachate Volume Pumped, KGallons
2007-2020

Point Name	Sample Date	Leachate, Volume Pumped (1000 gallons kgal)

Notes:
Data downloaded from WDNR GEMS database
Outliers and non detect flags highlighted in yellow.

Prepared by: SMB2
Checked by: MRS

Winnebago County Sunnyview Landfill Historical Data
Lift Station 4-6 Leachate Volume Pumped, KGallons
2007-2020

Point Name	Sample Date	Leachate, Volume Pumped (1000 gallons kgal)
LEB-4	1/29/2007	186.447
LEB-5	1/29/2007	75.316
LEB-4	2/28/2007	110.421
LEB-5	2/28/2007	11.025
LEB-4	3/30/2007	192
LEB-5	3/30/2007	171.128
LEB-4	4/30/2007	142.695
LEB-5	4/30/2007	57.696
LEB-4	5/29/2007	129.53
LEB-5	5/29/2007	58.207
LEB-4	6/25/2007	102.648
LEB-5	6/25/2007	61.474
LEB-4	7/30/2007	115.488
LEB-5	7/30/2007	11.172
LEB-4	8/30/2007	104.744
LEB-5	8/30/2007	120.138
LEB-4	9/28/2007	86.641
LEB-5	9/28/2007	119.199
LEB-6	9/28/2007	464.182
LEB-4	10/31/2007	134.433
LEB-5	10/31/2007	135.324
LEB-6	10/31/2007	988.392
LEB-4	11/26/2007	66.689
LEB-5	11/26/2007	11.314
LEB-6	11/26/2007	23.483
LEB-4	1/3/2008	111.012
LEB-5	1/3/2008	33.137
LEB-6	1/3/2008	87.615
LEB-4	1/31/2008	140.697
LEB-5	1/31/2008	116.319
LEB-6	1/31/2008	121.128
LEB-4	2/29/2008	71.418
LEB-5	2/29/2008	32.332
LEB-6	2/29/2008	28.929
LEB-4	3/31/2008	264.107
LEB-5	3/31/2008	358.266
LEB-6	3/31/2008	221.695
LEB-4	4/30/2008	194.724
LEB-5	4/30/2008	207.712
LEB-6	4/30/2008	309.463
LEB-4	5/27/2008	82.814
LEB-5	5/27/2008	54.792
LEB-6	5/27/2008	56.559
LEB-4	8/4/2008	104.477
LEB-5	8/4/2008	42.425
LEB-6	8/4/2008	97.686
LEB-4	9/2/2008	69.337
LEB-5	9/2/2008	36.66
LEB-6	9/2/2008	58.754
LEB-4	9/30/2008	58.412

Winnebago County Sunnyview Landfill Historical Data
Lift Station 4-6 Leachate Volume Pumped, KGallons
2007-2020

Point Name	Sample Date	Leachate, Volume Pumped (1000 gallons kgal)
LEB-5	9/30/2008	31.614
LEB-6	9/30/2008	50
LEB-4	10/29/2008	55.515
LEB-5	10/29/2008	34.865
LEB-6	10/29/2008	46.274
LEB-4	12/1/2008	58.49
LEB-5	12/1/2008	32.415
LEB-6	12/1/2008	57.98
LEB-4	1/5/2009	80.653
LEB-5	1/5/2009	55.849
LEB-6	1/5/2009	194.626
LEB-4	1/30/2009	44.472
LEB-5	1/30/2009	21.022
LEB-6	1/30/2009	69.6
LEB-4	2/27/2009	119.214
LEB-5	2/27/2009	57.948
LEB-6	2/27/2009	214.591
LEB-4	3/31/2009	205.509
LEB-5	3/31/2009	117.861
LEB-6	3/31/2009	330.179
LEB-4	4/30/2009	115.191
LEB-5	4/30/2009	61.928
LEB-6	4/30/2009	116.892
LEB-4	5/28/2009	94.624
LEB-5	5/28/2009	78.281
LEB-6	5/28/2009	105.939
LEB-4	6/30/2009	105.852
LEB-5	6/30/2009	71.585
LEB-6	6/30/2009	137.356
LEB-4	7/31/2009	38.457
LEB-5	7/31/2009	27.07
LEB-6	7/31/2009	29.759
LEB-4	8/31/2009	62.038
LEB-5	8/31/2009	34.091
LEB-6	8/31/2009	39.016
LEB-4	9/28/2009	54.848
LEB-5	9/28/2009	42.45
LEB-6	9/28/2009	23.336
LEB-4	10/28/2009	60.997
LEB-5	10/28/2009	36.269
LEB-6	10/28/2009	7.157
LEB-4	11/30/2009	67.088
LEB-5	11/30/2009	31.159
LEB-6	11/30/2009	1.395
LEB-4	1/4/2010	71.713
LEB-5	1/4/2010	32
LEB-6	1/4/2010	4.938
LEB-4	1/29/2010	46.092
LEB-5	1/29/2010	32.924
LEB-6	1/29/2010	1.93

Winnebago County Sunnyview Landfill Historical Data
Lift Station 4-6 Leachate Volume Pumped, KGallons
2007-2020

Point Name	Sample Date	Leachate, Volume Pumped (1000 gallons kgal)
LEB-4	2/26/2010	27.217
LEB-5	2/26/2010	27.688
LEB-6	2/26/2010	11.424
LEB-4	3/31/2010	42.165
LEB-5	3/31/2010	45.108
LEB-6	3/31/2010	1.942
LEB-4	4/30/2010	36.432
LEB-5	4/30/2010	55.517
LEB-6	4/30/2010	3.031
LEB-4	5/28/2010	41.326
LEB-5	5/28/2010	43.657
LEB-6	5/28/2010	28.648
LEB-4	6/30/2010	36.8
LEB-5	6/30/2010	14.023
LEB-6	6/30/2010	3.879
LEB-4	7/29/2010	58.197
LEB-5	7/29/2010	26.272
LEB-6	7/29/2010	18.688
LEB-4	8/31/2010	87.866
LEB-5	8/31/2010	1.354
LEB-6	8/31/2010	12.641
LEB-4	9/30/2010	44.678
LEB-5	9/30/2010	11.791
LEB-6	9/30/2010	7.065
LEB-4	10/31/2010	59.85
LEB-5	10/31/2010	13.754
LEB-6	10/31/2010	34.824
LEB-4	11/30/2010	61.45
LEB-5	11/30/2010	0.018
LEB-6	11/30/2010	49.85
LEB-4	12/31/2010	85.727
LEB-5	12/31/2010	22.403
LEB-6	12/31/2010	3.496
LEB-4	1/31/2011	24.613
LEB-5	1/31/2011	26.728
LEB-6	1/31/2011	3.53
LEB-4	2/28/2011	65.137
LEB-5	2/28/2011	70.685
LEB-6	2/28/2011	10.517
LEB-4	3/31/2011	130.627
LEB-5	3/31/2011	78.567
LEB-6	3/31/2011	241.192
LEB-4	4/30/2011	186.103
LEB-5	4/30/2011	155.83
LEB-6	4/30/2011	351.436
LEB-4	5/31/2011	121.39
LEB-5	5/31/2011	128.937
LEB-6	5/31/2011	135.155
LEB-4	6/30/2011	168.072
LEB-5	6/30/2011	157.629

Winnebago County Sunnyview Landfill Historical Data
Lift Station 4-6 Leachate Volume Pumped, KGallons
2007-2020

Point Name	Sample Date	Leachate, Volume Pumped (1000 gallons kgal)
LEB-6	6/30/2011	139.373
LEB-4	7/31/2011	191.773
LEB-5	7/31/2011	142.03
LEB-6	7/31/2011	131.196
LEB-4	8/31/2011	162.235
LEB-5	8/31/2011	134.189
LEB-6	8/31/2011	120.117
LEB-4	9/30/2011	149.042
LEB-5	9/30/2011	133.514
LEB-6	9/30/2011	145.7
LEB-4	10/31/2011	134.197
LEB-5	10/31/2011	166.246
LEB-6	10/31/2011	122.239
LEB-4	11/30/2011	171.554
LEB-5	11/30/2011	187.772
LEB-6	11/30/2011	131.347
LEB-4	12/14/2011	226.214
LEB-5	12/14/2011	201.801
LEB-6	12/14/2011	125.129
LEB-4	1/31/2012	168.873
LEB-5	1/31/2012	121.561
LEB-6	1/31/2012	77.312
LEB-4	2/29/2012	158.09
LEB-5	2/29/2012	134.453
LEB-6	2/29/2012	85.133
LEB-4	3/31/2012	185.145
LEB-5	3/31/2012	169.809
LEB-6	3/31/2012	124.51
LEB-4	4/30/2012	219.052
LEB-5	4/30/2012	162.472
LEB-6	4/30/2012	104.141
LEB-4	5/31/2012	177.811
LEB-5	5/31/2012	145.801
LEB-6	5/31/2012	126.106
LEB-4	6/13/2012	157.502
LEB-5	6/13/2012	128.116
LEB-6	6/13/2012	75.061
LEB-4	7/31/2012	157.929
LEB-5	7/31/2012	96.987
LEB-6	7/31/2012	79.885
LEB-4	8/31/2012	159.571
LEB-5	8/31/2012	103.26
LEB-6	8/31/2012	77.257
LEB-4	9/30/2012	138.772
LEB-5	9/30/2012	93.827
LEB-6	9/30/2012	68.384
LEB-4	10/31/2012	162.03
LEB-5	10/31/2012	96.558
LEB-6	10/31/2012	106.537
LEB-4	11/30/2012	131.646

Winnebago County Sunnyview Landfill Historical Data
Lift Station 4-6 Leachate Volume Pumped, KGallons
2007-2020

Point Name	Sample Date	Leachate, Volume Pumped (1000 gallons kgal)
LEB-5	11/30/2012	82.844
LEB-6	11/30/2012	102.778
LEB-4	12/13/2012	116.639
LEB-5	12/13/2012	90.603
LEB-6	12/13/2012	108.112
LEB-4	1/31/2013	149.209
LEB-5	1/31/2013	83.745
LEB-6	1/31/2013	149.359
LEB-4	2/28/2013	118.48
LEB-5	2/28/2013	67.5
LEB-6	2/28/2013	88.962
LEB-4	3/31/2013	196.514
LEB-5	3/31/2013	107.78
LEB-6	3/31/2013	208.354
LEB-4	4/29/2013	203.228
LEB-5	4/29/2013	109.012
LEB-6	4/29/2013	242.883
LEB-4	5/28/2013	135.9
LEB-5	5/28/2013	88.786
LEB-6	5/28/2013	115.483
LEB-4	6/26/2013	137.533
LEB-5	6/26/2013	93.825
LEB-6	6/26/2013	114.241
LEB-4	7/31/2013	91.698
LEB-5	7/31/2013	81.121
LEB-6	7/31/2013	77.317
LEB-4	8/30/2013	113.351
LEB-5	8/30/2013	78.299
LEB-6	8/30/2013	105.016
LEB-4	9/30/2013	181.626
LEB-5	9/30/2013	103.373
LEB-6	9/30/2013	115.177
LEB-4	10/31/2013	112.662
LEB-5	10/31/2013	102.767
LEB-6	10/31/2013	143.813
LEB-4	11/30/2013	99.289
LEB-5	11/30/2013	95.513
LEB-6	11/30/2013	149.238
LEB-4	12/17/2013	74.793
LEB-5	12/17/2013	87.578
LEB-6	12/17/2013	111.206
LEB-4	1/31/2014	96.702
LEB-5	1/31/2014	77.365
LEB-6	1/31/2014	94.425
LEB-4	2/28/2014	93.393
LEB-5	2/28/2014	70.182
LEB-6	2/28/2014	76.218
LEB-4	3/31/2014	88.33
LEB-5	3/31/2014	73.363
LEB-6	3/31/2014	92.76

Winnebago County Sunnyview Landfill Historical Data
Lift Station 4-6 Leachate Volume Pumped, KGallons
2007-2020

Point Name	Sample Date	Leachate, Volume Pumped (1000 gallons kgal)
LEB-4	4/30/2014	67.647
LEB-5	4/30/2014	61.411
LEB-6	4/30/2014	89.78
LEB-4	5/31/2014	76.516
LEB-5	5/31/2014	65.627
LEB-6	5/31/2014	90.169
LEB-4	6/30/2014	103.002
LEB-5	6/30/2014	79.547
LEB-6	6/30/2014	91.459
LEB-4	7/31/2014	122.355
LEB-5	7/31/2014	60.935
LEB-6	7/31/2014	76.933
LEB-4	8/31/2014	64.052
LEB-5	8/31/2014	51.758
LEB-6	8/31/2014	73.573
LEB-4	9/30/2014	61.991
LEB-5	9/30/2014	53.461
LEB-6	9/30/2014	77.324
LEB-4	10/31/2014	58.531
LEB-5	10/31/2014	62.883
LEB-6	10/31/2014	153.525
LEB-4	11/30/2014	50.757
LEB-5	11/30/2014	42.927
LEB-6	11/30/2014	113.914
LEB-4	12/31/2014	47.876
LEB-5	12/31/2014	47.87
LEB-6	12/31/2014	101.776
LEB-4	1/31/2015	51.669
LEB-5	1/31/2015	41.55
LEB-6	1/31/2015	98.62
LEB-4	2/28/2015	69.001
LEB-5	2/28/2015	35.606
LEB-6	2/28/2015	85.376
LEB-4	3/31/2015	59.737
LEB-5	3/31/2015	41.274
LEB-6	3/31/2015	115.409
LEB-4	4/30/2015	40.114
LEB-5	4/30/2015	34.073
LEB-6	4/30/2015	108.679
LEB-4	5/31/2015	58.666
LEB-5	5/31/2015	48.369
LEB-6	5/31/2015	77.119
LEB-4	6/30/2015	45.749
LEB-5	6/30/2015	38.602
LEB-6	6/30/2015	72.669
LEB-4	7/31/2015	41.35
LEB-5	7/31/2015	37.958
LEB-6	7/31/2015	80.461
LEB-4	8/31/2015	32.501
LEB-5	8/31/2015	26.579

Winnebago County Sunnyview Landfill Historical Data
Lift Station 4-6 Leachate Volume Pumped, KGallons
2007-2020

Point Name	Sample Date	Leachate, Volume Pumped (1000 gallons kgal)
LEB-6	8/31/2015	73.371
LEB-4	9/30/2015	38.874
LEB-5	9/30/2015	25.992
LEB-6	9/30/2015	91.998
LEB-4	10/31/2015	52.989
LEB-5	10/31/2015	27.522
LEB-6	10/31/2015	89.385
LEB-4	11/30/2015	38.551
LEB-5	11/30/2015	25.797
LEB-6	11/30/2015	82.256
LEB-4	12/31/2015	41.448
LEB-5	12/31/2015	27.606
LEB-6	12/31/2015	104.371
LEB-4	1/30/2016	27.857
LEB-5	1/30/2016	25.249
LEB-6	1/30/2016	57.05
LEB-4	2/29/2016	22.467
LEB-5	2/29/2016	25.026
LEB-6	2/29/2016	54.494
LEB-4	3/31/2016	22.649
LEB-5	3/31/2016	28.252
LEB-6	3/31/2016	58.731
LEB-4	4/30/2016	25.752
LEB-5	4/30/2016	33.587
LEB-6	4/30/2016	58.449
LEB-4	5/31/2016	30.069
LEB-5	5/31/2016	33.138
LEB-6	5/31/2016	54.976
LEB-4	6/30/2016	33.622
LEB-5	6/30/2016	29.896
LEB-6	6/30/2016	53.056
LEB-4	7/31/2016	47.616
LEB-5	7/31/2016	27.165
LEB-6	7/31/2016	56.89
LEB-4	8/31/2016	29.817
LEB-5	8/31/2016	24.157
LEB-6	8/31/2016	47.777
LEB-4	9/30/2016	28.873
LEB-5	9/30/2016	21.501
LEB-6	9/30/2016	28.82
LEB-4	10/31/2016	22.896
LEB-5	10/31/2016	20.122
LEB-6	10/31/2016	20.428
LEB-4	11/30/2016	20.189
LEB-5	11/30/2016	22.451
LEB-6	11/30/2016	29.7
LEB-4	12/31/2016	23.085
LEB-5	12/31/2016	26.046
LEB-6	12/31/2016	87.462
LEB-4	1/31/2017	17.826

Winnebago County Sunnyview Landfill Historical Data
Lift Station 4-6 Leachate Volume Pumped, KGallons
2007-2020

Point Name	Sample Date	Leachate, Volume Pumped (1000 gallons kgal)
LEB-5	1/31/2017	13.532
LEB-6	1/31/2017	51.217
LEB-4	2/28/2017	18.387
LEB-5	2/28/2017	27.163
LEB-6	2/28/2017	39.223
LEB-4	3/31/2017	18.702
LEB-5	3/31/2017	30.319
LEB-6	3/31/2017	45.33
LEB-4	4/30/2017	23.658
LEB-5	4/30/2017	25.903
LEB-6	4/30/2017	55.163
LEB-4	5/31/2017	15.749
LEB-5	5/31/2017	23.236
LEB-6	5/31/2017	42.723
LEB-4	6/30/2017	13.547
LEB-5	6/30/2017	25.461
LEB-6	6/30/2017	58.851
LEB-4	7/31/2017	13.129
LEB-5	7/31/2017	20.886
LEB-6	7/31/2017	41.335
LEB-4	8/31/2017	11.339
LEB-5	8/31/2017	20.528
LEB-6	8/31/2017	54.244
LEB-4	9/30/2017	11.831
LEB-5	9/30/2017	22.486
LEB-6	9/30/2017	41.453
LEB-4	10/31/2017	6.479
LEB-5	10/31/2017	16.067
LEB-6	10/31/2017	41.042
LEB-4	11/30/2017	6.979
LEB-5	11/30/2017	19.109
LEB-6	11/30/2017	41.996
LEB-4	12/31/2017	19.766
LEB-5	12/31/2017	16.862
LEB-6	12/31/2017	37.631
LEB-4	1/31/2018	27.256
LEB-5	1/31/2018	17.225
LEB-6	1/31/2018	37.369
LEB-4	2/28/2018	39.204
LEB-5	2/28/2018	17.477
LEB-6	2/28/2018	31.689
LEB-4	3/31/2018	49.086
LEB-5	3/31/2018	18.619
LEB-6	3/31/2018	47.389
LEB-4	4/30/2018	35.694
LEB-5	4/30/2018	17.452
LEB-6	4/30/2018	42.147
LEB-4	5/31/2018	18.506
LEB-5	5/31/2018	18.706
LEB-6	5/31/2018	38.501

Winnebago County Sunnyview Landfill Historical Data
Lift Station 4-6 Leachate Volume Pumped, KGallons
2007-2020

Point Name	Sample Date	Leachate, Volume Pumped (1000 gallons kgal)
LEB-4	6/30/2018	11.164
LEB-5	6/30/2018	14.957
LEB-6	6/30/2018	32.45
LEB-4	7/31/2018	7.191
LEB-5	7/31/2018	20.186
LEB-6	7/31/2018	28.194
LEB-4	8/31/2018	14.559
LEB-5	8/31/2018	15.322
LEB-6	8/31/2018	28.877
LEB-4	9/30/2018	10.083
LEB-5	9/30/2018	15.259
LEB-6	9/30/2018	34.441
LEB-4	10/31/2018	7.643
LEB-5	10/31/2018	16.688
LEB-6	10/31/2018	35.575
LEB-4	11/30/2018	10.249
LEB-5	11/30/2018	16.253
LEB-6	11/30/2018	33.274
LEB-4	12/31/2018	15.112
LEB-5	12/31/2018	18.252
LEB-6	12/31/2018	32.626
LEB-4	1/31/2019	11.223
LEB-5	1/31/2019	10.649
LEB-6	1/31/2019	24.762
LEB-4	2/28/2019	9.128
LEB-5	2/28/2019	14.804
LEB-6	2/28/2019	27.711
LEB-4	3/31/2019	9.586
LEB-5	3/31/2019	11.649
LEB-6	3/31/2019	31.335
LEB-4	4/30/2019	14.49
LEB-5	4/30/2019	14.067
LEB-6	4/30/2019	33.718
LEB-4	5/31/2019	29.598
LEB-5	5/31/2019	19.111
LEB-6	5/31/2019	30.05
LEB-4	6/30/2019	98.663
LEB-5	6/30/2019	10.637
LEB-6	6/30/2019	29.438
LEB-4	7/31/2019	29.858
LEB-5	7/31/2019	12.916
LEB-6	7/31/2019	21.189
LEB-4	8/31/2019	15.332
LEB-5	8/31/2019	12.38
LEB-6	8/31/2019	24.966
LEB-4	9/30/2019	15.295
LEB-5	9/30/2019	14.183
LEB-6	9/30/2019	28.373
LEB-4	10/31/2019	18.144
LEB-5	10/31/2019	11.96

Winnebago County Sunnyview Landfill Historical Data
Lift Station 4-6 Leachate Volume Pumped, KGallons
2007-2020

Point Name	Sample Date	Leachate, Volume Pumped (1000 gallons kgal)
LEB-6	10/31/2019	25.903
LEB-4	11/30/2019	16.425
LEB-5	11/30/2019	12.463
LEB-6	11/30/2019	25.644
LEB-4	12/31/2019	13.009
LEB-5	12/31/2019	11.836
LEB-6	12/31/2019	21.681
LEB-4	1/31/2020	13.993
LEB-5	1/31/2020	12.193
LEB-6	1/31/2020	23.437
LEB-4	2/29/2020	13.441
LEB-5	2/29/2020	10.276
LEB-6	2/29/2020	20.798
LEB-4	3/31/2020	14.638
LEB-5	3/31/2020	9.217
LEB-6	3/31/2020	22.827
LEB-4	4/30/2020	12.414
LEB-5	4/30/2020	8.789
LEB-6	4/30/2020	24.995
LEB-4	5/31/2020	13.003
LEB-5	5/31/2020	8.837
LEB-6	5/31/2020	22.95
LEB-4	6/30/2020	14.358
LEB-5	6/30/2020	10.964
LEB-6	6/30/2020	22.918
LEB-4	7/31/2020	13.762
LEB-5	7/31/2020	9.96
LEB-6	7/31/2020	23.336
LEB-4	8/31/2020	11.364
LEB-5	8/31/2020	15.915
LEB-6	8/31/2020	23.243
LEB-4	9/30/2020	11.487
LEB-5	9/30/2020	10.6
LEB-6	9/30/2020	22.698
LEB-4	10/31/2020	14.364
LEB-5	10/31/2020	7.592
LEB-6	10/31/2020	21.524
LEB-4	11/30/2020	13.346
LEB-5	11/30/2020	7.847
LEB-6	11/30/2020	22.805
LEB-4	12/31/2020	9.441
LEB-5	12/31/2020	6.574
LEB-6	12/31/2020	19.6

Notes:

Data downloaded from WDNR GEMS database

Outliers and non detect flags highlighted in yellow.

Prepared by: SMB2

Checked by: MRS

Outagamie County East Landfill Historical Data
BOD, mg/L
2007-2020

Point Name	Sample Date	Biochemical Oxygen Demand (mg/L)
E-1 LIFT STA.	5/22/2007	410
E-2 LIFT STA.	5/22/2007	200
E-1 LIFT STA.	9/10/2007	350
E-2 LIFT STA.	9/10/2007	290
E-1 LIFT STA.	11/21/2007	1300
E-2 LIFT STA.	11/21/2007	280
E-2 LIFT STA.	11/21/2007	290
E-1 LIFT STA.	5/16/2008	247
E-2 LIFT STA.	5/16/2008	186
E-2 LIFT STA.	5/16/2008	198
E-1 LIFT STA.	11/24/2008	335
E-1 LIFT STA.	11/24/2008	256
E-2 LIFT STA.	11/24/2008	258
E-1 LIFT STA.	5/29/2009	506
E-2 LIFT STA.	5/29/2009	103
E-2 LIFT STA.	5/29/2009	106
E-1 LIFT STA.	11/18/2009	220
E-1 LIFT STA.	11/18/2009	200
E-2 LIFT STA.	11/18/2009	768
E-1 LIFT STA.	5/25/2010	206
E-2 LIFT STA.	5/25/2010	209
E-2 LIFT STA.	5/25/2010	191
E-1 LIFT STA.	8/10/2010	132
E-2 LIFT STA.	8/10/2010	222
E-1 LIFT STA.	11/19/2010	172
E-2 LIFT STA.	11/19/2010	241
E-2 LIFT STA.	11/19/2010	238
E-1 LIFT STA.	5/25/2011	175
E-1 LIFT STA.	5/25/2011	148
E-2 LIFT STA.	5/25/2011	154
E-1 LIFT STA.	11/14/2011	155
E-2 LIFT STA.	11/14/2011	127
E-2 LIFT STA.	11/14/2011	110
E-1 LIFT STA.	5/23/2012	206
E-1 LIFT STA.	5/23/2012	271
E-2 LIFT STA.	5/31/2012	264
E-1 LIFT STA.	11/26/2012	84
E-1 LIFT STA.	11/26/2012	75
E-2 LIFT STA.	11/26/2012	120
E-1 LIFT STA.	5/23/2013	98.4
E-2 LIFT STA.	5/23/2013	153
E-2 LIFT STA.	5/23/2013	160
E-1 LIFT STA.	11/12/2013	146
E-2 LIFT STA.	11/12/2013	141
E-2 LIFT STA.	11/12/2013	66.8
E-1 LIFT STA.	5/27/2014	149
E-2 LIFT STA.	5/27/2014	171
E-1 LIFT STA.	11/5/2014	210
E-2 LIFT STA.	11/5/2014	201
E-1 LIFT STA.	5/21/2015	140

Outagamie County East Landfill Historical Data
BOD, mg/L
2007-2020

Point Name	Sample Date	Biochemical Oxygen Demand (mg/L)
E-2 LIFT STA.	5/21/2015	202
E-1 LIFT STA.	11/12/2015	204
E-1 LIFT STA.	5/18/2016	167
E-2 LIFT STA.	5/18/2016	189
E-1 LIFT STA.	11/15/2016	195
E-2 LIFT STA.	11/15/2016	186
E-1 LIFT STA.	5/24/2017	179
E-2 LIFT STA.	5/24/2017	163
E-1 LIFT STA.	11/14/2017	204
E-2 LIFT STA.	11/14/2017	222
E-1 LIFT STA.	5/3/2018	165
E-2 LIFT STA.	5/3/2018	77.3
E-1 LIFT STA.	6/11/2018	127
E-2 LIFT STA.	6/11/2018	145
E-1 LIFT STA.	7/12/2018	171
E-2 LIFT STA.	7/12/2018	163
E-1 LIFT STA.	8/15/2018	151
E-2 LIFT STA.	8/15/2018	171
E-1 LIFT STA.	11/5/2018	150
E-2 LIFT STA.	11/5/2018	182
E-1 LIFT STA.	3/19/2019	110
E-2 LIFT STA.	3/19/2019	106
E-1 LIFT STA.	4/29/2019	113
E-2 LIFT STA.	4/29/2019	103
E-1 LIFT STA.	5/8/2019	81.8
E-2 LIFT STA.	5/8/2019	95.6
E-2 LIFT STA.	11/6/2019	154
E-1 LIFT STA.	11/21/2019	219
E-1 LIFT STA.	3/4/2020	58
E-2 LIFT STA.	3/4/2020	188
E-1 LIFT STA.	3/18/2020	146
E-2 LIFT STA.	3/18/2020	76.7
E-1 LIFT STA.	4/2/2020	169
E-2 LIFT STA.	4/2/2020	100
E-1 LIFT STA.	4/29/2020	129
E-2 LIFT STA.	4/29/2020	172
E-1 LIFT STA.	5/4/2020	206
E-2 LIFT STA.	5/4/2020	88.1
E-1 LIFT STA.	5/21/2020	89.4
E-2 LIFT STA.	5/21/2020	96.2
E-1 LIFT STA.	11/9/2020	581
E-2 LIFT STA.	11/9/2020	151
E-1 LIFT STA.	11/25/2020	376
E-2 LIFT STA.	11/25/2020	103

Notes:
Data downloaded from WDNR GEMS database

Prepared by: SMB2
Checked by: MRS

Outagamie County East Landfill Historical Data
Nitrogen, Ammonia, mg/L
2007-2020

Point Name	Sample Date	Nitrogen, Ammonia, Dissolved (mg/L as N)
E-1 LIFT STA.	5/22/2007	640
E-2 LIFT STA.	5/22/2007	870
E-1 LIFT STA.	11/21/2007	690
E-2 LIFT STA.	11/21/2007	1200
E-2 LIFT STA.	11/21/2007	1100
E-1 LIFT STA.	5/16/2008	609
E-2 LIFT STA.	5/16/2008	693
E-2 LIFT STA.	5/16/2008	722
E-1 LIFT STA.	11/24/2008	821
E-1 LIFT STA.	11/24/2008	814
E-2 LIFT STA.	11/24/2008	1050
E-1 LIFT STA.	5/29/2009	361
E-2 LIFT STA.	5/29/2009	480
E-2 LIFT STA.	5/29/2009	499
E-1 LIFT STA.	11/18/2009	691
E-1 LIFT STA.	11/18/2009	656
E-2 LIFT STA.	11/18/2009	918
E-1 LIFT STA.	5/25/2010	693
E-2 LIFT STA.	5/25/2010	681
E-2 LIFT STA.	5/25/2010	750
E-1 LIFT STA.	11/19/2010	713
E-2 LIFT STA.	11/19/2010	913
E-2 LIFT STA.	11/19/2010	901
E-1 LIFT STA.	5/25/2011	452
E-1 LIFT STA.	5/25/2011	592
E-2 LIFT STA.	5/25/2011	585
E-1 LIFT STA.	11/14/2011	564
E-2 LIFT STA.	11/14/2011	425
E-2 LIFT STA.	11/14/2011	429
E-1 LIFT STA.	5/23/2012	736
E-1 LIFT STA.	5/23/2012	881
E-2 LIFT STA.	5/31/2012	900
E-1 LIFT STA.	11/26/2012	530
E-1 LIFT STA.	11/26/2012	557
E-2 LIFT STA.	11/26/2012	672
E-1 LIFT STA.	5/23/2013	523
E-2 LIFT STA.	5/23/2013	695
E-2 LIFT STA.	5/23/2013	648
E-1 LIFT STA.	11/12/2013	781
E-2 LIFT STA.	11/12/2013	724
E-2 LIFT STA.	11/12/2013	891
E-1 LIFT STA.	5/27/2014	595
E-2 LIFT STA.	5/27/2014	710
E-1 LIFT STA.	11/5/2014	710
E-2 LIFT STA.	11/5/2014	944
E-1 LIFT STA.	5/21/2015	470
E-2 LIFT STA.	5/21/2015	780
E-1 LIFT STA.	11/12/2015	686
E-1 LIFT STA.	5/18/2016	682
E-2 LIFT STA.	5/18/2016	883

Outagamie County East Landfill Historical Data
Nitrogen, Ammonia, mg/L
2007-2020

Point Name	Sample Date	Nitrogen, Ammonia, Dissolved (mg/L as N)
E-1 LIFT STA.	11/15/2016	737
E-2 LIFT STA.	11/15/2016	743
E-1 LIFT STA.	5/24/2017	589
E-2 LIFT STA.	5/24/2017	689
E-1 LIFT STA.	11/14/2017	1150
E-2 LIFT STA.	11/14/2017	1340
E-1 LIFT STA.	5/3/2018	374
E-2 LIFT STA.	5/3/2018	394
E-1 LIFT STA.	6/11/2018	882
E-2 LIFT STA.	6/11/2018	1290
E-1 LIFT STA.	7/12/2018	790
E-2 LIFT STA.	7/12/2018	1110
E-1 LIFT STA.	8/15/2018	938
E-2 LIFT STA.	8/15/2018	1280
E-1 LIFT STA.	11/5/2018	842
E-2 LIFT STA.	11/5/2018	1240
E-1 LIFT STA.	3/19/2019	459
E-2 LIFT STA.	3/19/2019	668
E-1 LIFT STA.	4/29/2019	434
E-2 LIFT STA.	4/29/2019	442
E-1 LIFT STA.	5/8/2019	325
E-2 LIFT STA.	5/8/2019	478
E-1 LIFT STA.	11/6/2019	354
E-2 LIFT STA.	11/6/2019	298
E-1 LIFT STA.	11/21/2019	235
E-2 LIFT STA.	11/21/2019	12.3
E-1 LIFT STA.	3/4/2020	233
E-2 LIFT STA.	3/4/2020	676
E-1 LIFT STA.	3/18/2020	568
E-2 LIFT STA.	3/18/2020	231
E-1 LIFT STA.	4/2/2020	146
E-2 LIFT STA.	4/2/2020	543
E-1 LIFT STA.	4/29/2020	396
E-2 LIFT STA.	4/29/2020	734
E-1 LIFT STA.	5/4/2020	598
E-2 LIFT STA.	5/4/2020	663
E-1 LIFT STA.	5/21/2020	142
E-2 LIFT STA.	5/21/2020	410
E-1 LIFT STA.	11/9/2020	531
E-2 LIFT STA.	11/9/2020	656
E-1 LIFT STA.	11/25/2020	502
E-2 LIFT STA.	11/25/2020	588

Notes:
Data downloaded from WDNR GEMS database

Prepared by: SMB2
Checked by: MRS

Outagamie County East Landfill Historical Data
Leachate Volume Pumped, KGallons
2007-2020

Point Name	Sample Date	Leachate, Volume Pumped (1000 gallons kgal)
E-1 LIFT STA.	1/31/2007	269.85
E-2 LIFT STA.	1/31/2007	212.64
E-1 LIFT STA.	2/28/2007	97.35
E-2 LIFT STA.	2/28/2007	69.92
E-1 LIFT STA.	3/31/2007	288.71
E-2 LIFT STA.	3/31/2007	273.88
E-1 LIFT STA.	4/30/2007	224.15
E-2 LIFT STA.	4/30/2007	210.96
E-1 LIFT STA.	5/31/2007	156.39
E-2 LIFT STA.	5/31/2007	128.18
E-1 LIFT STA.	6/30/2007	240.7
E-2 LIFT STA.	6/30/2007	263.3
E-1 LIFT STA.	7/31/2007	140.3
E-2 LIFT STA.	7/31/2007	143.3
E-1 LIFT STA.	8/31/2007	148.2
E-2 LIFT STA.	8/31/2007	73.4
E-1 LIFT STA.	9/30/2007	128.2
E-2 LIFT STA.	9/30/2007	82.1
E-1 LIFT STA.	10/31/2007	196
E-2 LIFT STA.	10/31/2007	146.3
E-1 LIFT STA.	11/30/2007	121.1
E-2 LIFT STA.	11/30/2007	78.6
E-1 LIFT STA.	12/31/2007	258.8
E-2 LIFT STA.	12/31/2007	80.3
E-1 LIFT STA.	1/31/2008	419.6
E-2 LIFT STA.	1/31/2008	530.1
E-1 LIFT STA.	2/28/2008	169.4
E-2 LIFT STA.	2/28/2008	145.8
E-1 LIFT STA.	3/31/2008	537.5
E-2 LIFT STA.	3/31/2008	629.6
E-1 LIFT STA.	4/30/2008	744
E-2 LIFT STA.	4/30/2008	884.5
E-1 LIFT STA.	5/31/2008	281.8
E-2 LIFT STA.	5/31/2008	116.7
E-1 LIFT STA.	6/30/2008	291
E-2 LIFT STA.	6/30/2008	162.5
E-1 LIFT STA.	7/31/2008	122
E-2 LIFT STA.	7/31/2008	120.9
E-1 LIFT STA.	8/31/2008	165
E-2 LIFT STA.	8/31/2008	120.2
E-1 LIFT STA.	9/30/2008	133.7
E-2 LIFT STA.	9/30/2008	102.5
E-1 LIFT STA.	10/31/2008	123.1
E-2 LIFT STA.	10/31/2008	95.1
E-1 LIFT STA.	11/30/2008	103
E-2 LIFT STA.	11/30/2008	75.7
E-1 LIFT STA.	12/31/2008	221.6
E-2 LIFT STA.	12/31/2008	261.5
E-1 LIFT STA.	1/31/2009	189.4
E-2 LIFT STA.	1/31/2009	100.4

Outagamie County East Landfill Historical Data
Leachate Volume Pumped, KGallons
2007-2020

Point Name	Sample Date	Leachate, Volume Pumped (1000 gallons kgal)
E-1 LIFT STA.	2/28/2009	307.4
E-2 LIFT STA.	2/28/2009	272.7
E-1 LIFT STA.	3/31/2009	625
E-2 LIFT STA.	3/31/2009	520.3
E-1 LIFT STA.	4/30/2009	368
E-2 LIFT STA.	4/30/2009	433.1
E-1 LIFT STA.	5/31/2009	279.9
E-2 LIFT STA.	5/31/2009	220.2
E-1 LIFT STA.	6/30/2009	276.4
E-2 LIFT STA.	6/30/2009	259.3
E-1 LIFT STA.	7/31/2009	153
E-2 LIFT STA.	7/31/2009	115
E-1 LIFT STA.	8/31/2009	249.2
E-2 LIFT STA.	8/31/2009	149.3
E-1 LIFT STA.	9/30/2009	114.1
E-2 LIFT STA.	9/30/2009	101
E-1 LIFT STA.	10/31/2009	202
E-2 LIFT STA.	10/31/2009	130
E-1 LIFT STA.	11/30/2009	205.4
E-2 LIFT STA.	11/30/2009	264
E-1 LIFT STA.	12/30/2009	221.9
E-2 LIFT STA.	12/30/2009	253.9
E-1 LIFT STA.	1/31/2010	165
E-2 LIFT STA.	1/31/2010	324.3
E-1 LIFT STA.	2/28/2010	96.2
E-2 LIFT STA.	2/28/2010	152.2
E-1 LIFT STA.	3/31/2010	311.2
E-2 LIFT STA.	3/31/2010	339.6
E-1 LIFT STA.	4/30/2010	272
E-2 LIFT STA.	4/30/2010	421.5
E-1 LIFT STA.	5/31/2010	186.6
E-2 LIFT STA.	5/31/2010	215.3
E-1 LIFT STA.	6/30/2010	270
E-2 LIFT STA.	6/30/2010	361.7
E-1 LIFT STA.	7/31/2010	362.1
E-2 LIFT STA.	7/31/2010	545.6
E-1 LIFT STA.	8/31/2010	250.2
E-2 LIFT STA.	8/31/2010	280.4
E-1 LIFT STA.	9/30/2010	200.6
E-2 LIFT STA.	9/30/2010	210.8
E-1 LIFT STA.	10/31/2010	127.9
E-2 LIFT STA.	10/31/2010	152.3
E-1 LIFT STA.	11/30/2010	140.6
E-2 LIFT STA.	11/30/2010	135.8
E-1 LIFT STA.	12/31/2010	68.5
E-2 LIFT STA.	12/31/2010	97.5
E-1 LIFT STA.	1/31/2011	136.5
E-2 LIFT STA.	1/31/2011	180.3
E-1 LIFT STA.	2/28/2011	114.6
E-2 LIFT STA.	2/28/2011	149.3

Outagamie County East Landfill Historical Data
Leachate Volume Pumped, KGallons
2007-2020

Point Name	Sample Date	Leachate, Volume Pumped (1000 gallons kgal)
E-1 LIFT STA.	3/31/2011	158.7
E-2 LIFT STA.	3/31/2011	367.5
E-1 LIFT STA.	4/30/2011	449.3
E-2 LIFT STA.	4/30/2011	106.5
E-1 LIFT STA.	5/31/2011	108.5
E-2 LIFT STA.	5/31/2011	327.1
E-1 LIFT STA.	6/30/2011	271.6
E-2 LIFT STA.	6/30/2011	314.5
E-1 LIFT STA.	7/31/2011	225.2
E-2 LIFT STA.	7/31/2011	145.4
E-1 LIFT STA.	8/31/2011	127.7
E-2 LIFT STA.	8/31/2011	159.9
E-1 LIFT STA.	9/30/2011	235.2
E-2 LIFT STA.	9/30/2011	126.7
E-1 LIFT STA.	10/31/2011	275.1
E-2 LIFT STA.	10/31/2011	140.4
E-1 LIFT STA.	11/30/2011	317.5
E-2 LIFT STA.	11/30/2011	392.5
E-1 LIFT STA.	12/31/2011	277.8
E-2 LIFT STA.	12/31/2011	223.4
E-1 LIFT STA.	1/1/2012	220.1
E-2 LIFT STA.	1/1/2012	183.9
E-1 LIFT STA.	2/29/2012	196.1
E-2 LIFT STA.	2/29/2012	119.3
E-1 LIFT STA.	3/31/2012	172.4
E-2 LIFT STA.	3/31/2012	263.6
E-1 LIFT STA.	4/30/2012	129.8
E-2 LIFT STA.	4/30/2012	184.6
E-1 LIFT STA.	5/31/2012	225.9
E-2 LIFT STA.	5/31/2012	292
E-1 LIFT STA.	6/30/2012	121.1
E-2 LIFT STA.	6/30/2012	111.6
E-1 LIFT STA.	7/31/2012	135.4
E-2 LIFT STA.	7/31/2012	181.3
E-1 LIFT STA.	8/31/2012	143.8
E-2 LIFT STA.	8/31/2012	172
E-1 LIFT STA.	9/30/2012	134.6
E-2 LIFT STA.	9/30/2012	94.9
E-1 LIFT STA.	10/31/2012	101.4
E-2 LIFT STA.	10/31/2012	266.4
E-1 LIFT STA.	11/30/2012	86.6
E-2 LIFT STA.	11/30/2012	211.1
E-1 LIFT STA.	12/31/2012	123.3
E-2 LIFT STA.	12/31/2012	125.9
E-1 LIFT STA.	1/31/2013	185.1
E-2 LIFT STA.	1/31/2013	269.9
E-1 LIFT STA.	2/28/2013	153.8
E-2 LIFT STA.	2/28/2013	203.4
E-1 LIFT STA.	3/31/2013	204.8
E-2 LIFT STA.	3/31/2013	314.3

Outagamie County East Landfill Historical Data
Leachate Volume Pumped, KGallons
2007-2020

Point Name	Sample Date	Leachate, Volume Pumped (1000 gallons kgal)
E-1 LIFT STA.	4/30/2013	282.1
E-2 LIFT STA.	4/30/2013	653
E-1 LIFT STA.	5/31/2013	165.4
E-2 LIFT STA.	5/31/2013	341.1
E-1 LIFT STA.	6/30/2013	124.3
E-2 LIFT STA.	6/30/2013	258.3
E-1 LIFT STA.	7/31/2013	130.1
E-2 LIFT STA.	7/31/2013	345.2
E-1 LIFT STA.	8/31/2013	153.3
E-2 LIFT STA.	8/31/2013	159
E-1 LIFT STA.	9/30/2013	111.9
E-2 LIFT STA.	9/30/2013	166.2
E-1 LIFT STA.	10/31/2013	100.5
E-2 LIFT STA.	10/31/2013	156.7
E-1 LIFT STA.	11/30/2013	191.7
E-2 LIFT STA.	11/30/2013	185
E-1 LIFT STA.	3/31/2014	126.7
E-2 LIFT STA.	3/31/2014	460.2
E-1 LIFT STA.	4/30/2014	279.1
E-2 LIFT STA.	4/30/2014	428.9
E-1 LIFT STA.	5/31/2014	287.5
E-2 LIFT STA.	5/31/2014	267.1
E-1 LIFT STA.	6/30/2014	377.1
E-2 LIFT STA.	6/30/2014	176.9
E-1 LIFT STA.	7/31/2014	272.9
E-2 LIFT STA.	7/31/2014	78.4
E-1 LIFT STA.	8/31/2014	99
E-2 LIFT STA.	8/31/2014	259.2
E-1 LIFT STA.	9/30/2014	202.3
E-2 LIFT STA.	9/30/2014	173.5
E-1 LIFT STA.	10/31/2014	234.5
E-2 LIFT STA.	10/31/2014	70.3
E-1 LIFT STA.	11/30/2014	62.7
E-2 LIFT STA.	11/30/2014	142.1
E-1 LIFT STA.	12/31/2014	129.1
E-2 LIFT STA.	12/31/2014	298.4
E-1 LIFT STA.	1/31/2015	91.7
E-2 LIFT STA.	1/31/2015	159.9
E-1 LIFT STA.	2/28/2015	74.1
E-2 LIFT STA.	2/28/2015	130.1
E-1 LIFT STA.	3/31/2015	85.3
E-2 LIFT STA.	3/31/2015	171.2
E-1 LIFT STA.	4/30/2015	136.2
E-2 LIFT STA.	4/30/2015	258.6
E-1 LIFT STA.	5/31/2015	116.5
E-2 LIFT STA.	5/31/2015	167.8
E-1 LIFT STA.	6/30/2015	422.4
E-2 LIFT STA.	6/30/2015	82.1
E-1 LIFT STA.	7/31/2015	120.1
E-2 LIFT STA.	7/31/2015	163.6

Outagamie County East Landfill Historical Data
Leachate Volume Pumped, KGallons
2007-2020

Point Name	Sample Date	Leachate, Volume Pumped (1000 gallons kgal)
E-1 LIFT STA.	8/31/2015	117.4
E-2 LIFT STA.	8/31/2015	108.8
E-1 LIFT STA.	9/30/2015	202.8
E-2 LIFT STA.	9/30/2015	57.9
E-1 LIFT STA.	10/31/2015	122.8
E-2 LIFT STA.	10/31/2015	102.5
E-1 LIFT STA.	11/30/2015	143.6
E-2 LIFT STA.	11/30/2015	57.2
E-1 LIFT STA.	12/31/2015	536.2
E-2 LIFT STA.	12/31/2015	259.3
E-1 LIFT STA.	1/31/2016	309.8
E-2 LIFT STA.	1/31/2016	154.7
E-1 LIFT STA.	2/29/2016	454.5
E-2 LIFT STA.	2/29/2016	2.7
E-1 LIFT STA.	3/31/2016	612.2
E-2 LIFT STA.	3/31/2016	129.6
E-1 LIFT STA.	4/30/2016	514.6
E-2 LIFT STA.	4/30/2016	74.8
E-1 LIFT STA.	5/31/2016	118.2
E-2 LIFT STA.	5/31/2016	186.8
E-1 LIFT STA.	6/30/2016	251.2
E-2 LIFT STA.	6/30/2016	357.3
E-1 LIFT STA.	7/31/2016	227.4
E-2 LIFT STA.	7/31/2016	333
E-1 LIFT STA.	8/31/2016	253.1
E-2 LIFT STA.	8/31/2016	452.1
E-1 LIFT STA.	9/30/2016	641.4
E-2 LIFT STA.	9/30/2016	0
E-1 LIFT STA.	10/31/2016	496.4
E-2 LIFT STA.	10/31/2016	252
E-1 LIFT STA.	11/30/2016	329.4
E-2 LIFT STA.	11/30/2016	372.9
E-1 LIFT STA.	12/31/2016	395.4
E-2 LIFT STA.	12/31/2016	145.2
E-1 LIFT STA.	1/31/2017	277.6
E-2 LIFT STA.	1/31/2017	287.4
E-1 LIFT STA.	2/28/2017	131
E-2 LIFT STA.	2/28/2017	256.6
E-1 LIFT STA.	3/31/2017	219.7
E-2 LIFT STA.	3/31/2017	305.3
E-1 LIFT STA.	4/30/2017	225.1
E-2 LIFT STA.	4/30/2017	273.7
E-1 LIFT STA.	5/31/2017	245.8
E-2 LIFT STA.	5/31/2017	312.1
E-1 LIFT STA.	6/30/2017	161.9
E-2 LIFT STA.	6/30/2017	345.3
E-1 LIFT STA.	7/31/2017	127.4
E-2 LIFT STA.	7/31/2017	378
E-1 LIFT STA.	8/31/2017	146.7
E-2 LIFT STA.	8/31/2017	37.3

Outagamie County East Landfill Historical Data
Leachate Volume Pumped, KGallons
2007-2020

Point Name	Sample Date	Leachate, Volume Pumped (1000 gallons kgal)
E-1 LIFT STA.	9/30/2017	219
E-2 LIFT STA.	9/30/2017	49
E-1 LIFT STA.	10/31/2017	178.3
E-2 LIFT STA.	10/31/2017	47.4
E-1 LIFT STA.	11/30/2017	177.1
E-2 LIFT STA.	11/30/2017	116.5
E-1 LIFT STA.	12/31/2017	115.7
E-2 LIFT STA.	12/31/2017	160.2
E-1 LIFT STA.	1/31/2018	170.2
E-2 LIFT STA.	1/31/2018	58.2
E-1 LIFT STA.	2/28/2018	107.3
E-2 LIFT STA.	2/28/2018	146.9
E-1 LIFT STA.	3/31/2018	92.1
E-2 LIFT STA.	3/31/2018	92.8
E-1 LIFT STA.	4/30/2018	255.9
E-2 LIFT STA.	4/30/2018	240.1
E-1 LIFT STA.	5/31/2018	271.8
E-2 LIFT STA.	5/31/2018	203.8
E-1 LIFT STA.	6/30/2018	76.7
E-2 LIFT STA.	6/30/2018	120.2
E-1 LIFT STA.	7/31/2018	83.8
E-2 LIFT STA.	7/31/2018	87.3
E-1 LIFT STA.	8/31/2018	64.2
E-2 LIFT STA.	8/31/2018	62.8
E-1 LIFT STA.	9/30/2018	360.7
E-2 LIFT STA.	9/30/2018	38.5
E-1 LIFT STA.	10/31/2018	221.1
E-2 LIFT STA.	10/31/2018	217
E-1 LIFT STA.	11/30/2018	100.7
E-2 LIFT STA.	11/30/2018	116.2
E-1 LIFT STA.	12/31/2018	95
E-2 LIFT STA.	12/31/2018	91.4
E-1 LIFT STA.	1/31/2019	144.3
E-2 LIFT STA.	1/31/2019	151.4
E-1 LIFT STA.	2/28/2019	103.5
E-2 LIFT STA.	2/28/2019	67.2
E-1 LIFT STA.	3/31/2019	177.7
E-2 LIFT STA.	3/31/2019	53.9
E-1 LIFT STA.	4/30/2019	180.1
E-2 LIFT STA.	4/30/2019	109.8
E-1 LIFT STA.	5/31/2019	151.5
E-2 LIFT STA.	5/31/2019	91.8
E-1 LIFT STA.	6/30/2019	134.8
E-2 LIFT STA.	6/30/2019	17.2
E-1 LIFT STA.	7/31/2019	244.7
E-2 LIFT STA.	7/31/2019	57.5
E-1 LIFT STA.	8/31/2019	54.6
E-2 LIFT STA.	8/31/2019	60.1
E-1 LIFT STA.	9/30/2019	160.8
E-2 LIFT STA.	9/30/2019	101.3

Outagamie County East Landfill Historical Data
Leachate Volume Pumped, KGallons
2007-2020

Point Name	Sample Date	Leachate, Volume Pumped (1000 gallons kgal)
E-1 LIFT STA.	10/31/2019	271.5
E-2 LIFT STA.	10/31/2019	98.3
E-1 LIFT STA.	11/30/2019	112.1
E-2 LIFT STA.	11/30/2019	80.3
E-1 LIFT STA.	12/31/2019	233.9
E-2 LIFT STA.	12/31/2019	86.9
E-1 LIFT STA.	1/31/2020	119.9
E-2 LIFT STA.	1/31/2020	68.7
E-1 LIFT STA.	2/29/2020	81.3
E-2 LIFT STA.	2/29/2020	62.6
E-1 LIFT STA.	3/31/2020	364.4
E-2 LIFT STA.	3/31/2020	90
E-1 LIFT STA.	4/30/2020	102.4
E-2 LIFT STA.	4/30/2020	82.2
E-1 LIFT STA.	5/31/2020	188.9
E-2 LIFT STA.	5/31/2020	89.7
E-1 LIFT STA.	6/30/2020	83.7
E-2 LIFT STA.	6/30/2020	75.4
E-1 LIFT STA.	7/31/2020	45.2
E-2 LIFT STA.	7/31/2020	66
E-1 LIFT STA.	8/31/2020	37.7
E-2 LIFT STA.	8/31/2020	59
E-1 LIFT STA.	9/30/2020	31.7
E-2 LIFT STA.	9/30/2020	46.1
E-1 LIFT STA.	10/31/2020	34.7
E-2 LIFT STA.	10/31/2020	49.2
E-1 LIFT STA.	11/30/2020	47.7
E-2 LIFT STA.	11/30/2020	52.3
E-1 LIFT STA.	12/31/2020	39.1
E-2 LIFT STA.	12/31/2020	51.6

Notes:
Data downloaded from WDNR GEMS database

Prepared by: SMB2
Checked by: MRS

Outagamie County Northeast Landfill Historical Data
Ammonia, Nitrogen, mg/L
2012-2020

Point Name	Sample Date	Biochemical Oxygen Demand (mg/L)
PB-1	5/23/2012	4650
PB-1	11/26/2012	12300
PB-1	5/23/2013	590
PB-1	11/12/2013	3070
PB-1	5/27/2014	681
PB-1	5/21/2015	346
PB-2	5/21/2015	424
PB-1	11/12/2015	459
PB-2	11/12/2015	1900
PB-1	2/8/2016	257
PB-2	2/8/2016	8030
PB-1	5/19/2016	349
PB-1	8/16/2016	185
PB-2	8/16/2016	600
PB-1	11/15/2016	399
PB-2	11/15/2016	197
PB-1	5/24/2017	406
PB-1	9/28/2017	3400
PB-2	9/28/2017	243
PB-1	11/14/2017	1280
PB-2	11/14/2017	539
PB-1	12/12/2017	1040
PB-2	12/12/2017	309
PB-1	1/16/2018	804
PB-2	1/16/2018	349
PB-1	2/5/2018	1210
PB-1	2/7/2018	1230
PB-2	2/7/2018	414
PB-1	5/3/2018	602
PB-2	5/3/2018	236
PB-3	5/3/2018	699
PB-1	6/11/2018	545
PB-2	6/11/2018	140
PB-3	6/11/2018	2160
PB-1	7/12/2018	539
PB-2	7/12/2018	214
PB-3	7/12/2018	7090
PB-1	8/15/2018	860
PB-2	8/15/2018	169
PB-3	8/15/2018	3860
PB-1	9/1/2018	639
PB-2	9/1/2018	254
PB-3	9/1/2018	14600
PB-1	10/1/2018	594
PB-2	10/1/2018	157
PB-3	10/1/2018	41600
PB-1	11/1/2018	512

Outagamie County Northeast Landfill Historical Data
Ammonia, Nitrogen, mg/L
2012-2020

Point Name	Sample Date	Biochemical Oxygen Demand (mg/L)
PB-2	11/1/2018	198
PB-3	11/1/2018	16900
PB-1	12/1/2018	451
PB-2	12/1/2018	108
PB-3	12/1/2018	31400
PB-1	1/1/2019	305
PB-2	1/1/2019	279
PB-3	1/1/2019	29300
PB-1	2/1/2019	406
PB-2	2/1/2019	301
PB-3	2/1/2019	57800
PB-1	3/1/2019	176
PB-2	3/1/2019	100
PB-3	3/1/2019	12200
PB-1	4/1/2019	240
PB-2	4/1/2019	180
PB-3	4/1/2019	18300
PB-1	5/1/2019	195
PB-2	5/1/2019	208
PB-3	5/1/2019	18000
PB-1	6/1/2019	308
PB-2	6/1/2019	344
PB-3	6/1/2019	12900
PB-1	7/1/2019	564
PB-2	7/1/2019	282
PB-3	7/1/2019	8390
PB-1	8/1/2019	308
PB-2	8/1/2019	276
PB-3	8/1/2019	3900
PB-1	8/29/2019	507
PB-2	8/29/2019	412
PB-3	8/29/2019	3520
PB-1	9/4/2019	547
PB-2	9/4/2019	336
PB-3	9/4/2019	4780
PB-1	9/19/2019	440
PB-2	9/19/2019	242
PB-3	9/19/2019	2880
PB-1	10/2/2019	328
PB-2	10/2/2019	263
PB-3	10/2/2019	1840
PB-1	10/21/2019	682
PB-2	10/21/2019	176
PB-3	10/21/2019	3360
PB-1	11/6/2019	755
PB-2	11/6/2019	362
PB-3	11/6/2019	4700
PB-1	11/21/2019	315
PB-2	11/21/2019	362
PB-3	11/21/2019	3720
PB-1	12/4/2019	510

Outagamie County Northeast Landfill Historical Data
Ammonia, Nitrogen, mg/L
2012-2020

Point Name	Sample Date	Biochemical Oxygen Demand (mg/L)
PB-2	12/4/2019	226
PB-3	12/4/2019	3230
PB-1	12/27/2019	401
PB-2	12/27/2019	409
PB-3	12/27/2019	5750
PB-1	1/9/2020	399
PB-2	1/9/2020	289
PB-3	1/9/2020	10400
PB-1	1/30/2020	317
PB-2	1/30/2020	1290
PB-3	1/30/2020	12400
PB-1	2/6/2020	322
PB-2	2/6/2020	614
PB-3	2/6/2020	8840
PB-1	2/19/2020	432
PB-2	2/19/2020	557
PB-3	2/19/2020	17200
PB-1	3/4/2020	241
PB-2	3/4/2020	323
PB-3	3/4/2020	6430
PB-1	3/18/2020	335
PB-2	3/18/2020	337
PB-3	3/18/2020	8610
PB-1	4/2/2020	186
PB-2	4/2/2020	183
PB-3	4/2/2020	6190
PB-1	4/29/2020	337
PB-2	4/29/2020	231
PB-3	4/29/2020	16600
PB-1	5/4/2020	337
PB-2	5/4/2020	217
PB-3	5/4/2020	14700
PB-1	5/21/2020	246
PB-2	5/21/2020	155
PB-3	5/21/2020	8010
PB-1	6/8/2020	295
PB-2	6/8/2020	209
PB-3	6/8/2020	8180
PB-1	6/19/2020	362
PB-2	6/19/2020	260
PB-3	6/19/2020	18200
PB-1	7/6/2020	291
PB-2	7/6/2020	283
PB-3	7/6/2020	11900
PB-1	7/29/2020	315
PB-2	7/29/2020	168
PB-3	7/29/2020	9270
PB-1	8/6/2020	600
PB-2	8/6/2020	273
PB-3	8/6/2020	8550
PB-1	8/25/2020	200

Outagamie County Northeast Landfill Historical Data
Ammonia, Nitrogen, mg/L
2012-2020

Point Name	Sample Date	Biochemical Oxygen Demand (mg/L)
PB-2	8/25/2020	143
PB-3	8/25/2020	11,700
PB-1	9/3/2020	464
PB-2	9/3/2020	449
PB-3	9/3/2020	15400
PB-1	9/21/2020	319
PB-2	9/21/2020	670
PB-3	9/21/2020	11000
PB-1	10/8/2020	424
PB-2	10/8/2020	558
PB-3	10/8/2020	9180
PB-1	10/28/2020	1920
PB-2	10/28/2020	485
PB-3	10/28/2020	10100
PB-1	11/9/2020	3560
PB-2	11/9/2020	666
PB-3	11/9/2020	10600
PB-1	11/25/2020	1890
PB-2	11/25/2020	906
PB-3	11/25/2020	19700
PB-1	12/4/2020	599
PB-2	12/4/2020	954
PB-3	12/4/2020	29200
PB-1	12/29/2020	638
PB-2	12/29/2020	1000
PB-3	12/29/2020	20800

Notes:
Data downloaded from WDNR GEMS database

Prepared by: SMB2
Checked by: MRS

Outagamie County Northeast Landfill Historical Data
Ammonia, Nitrogen, mg/L
2012-2020

Point Name	Sample Date	Nitrogen, Ammonia, Dissolved (mg/L as N)
PB-1	5/23/2012	79.7
PB-1	11/26/2012	390
PB-1	5/23/2013	132
PB-1	11/12/2013	291
PB-1	5/27/2014	819
PB-1	5/21/2015	808
PB-2	5/21/2015	17.7
PB-1	11/12/2015	1140
PB-2	11/12/2015	168
PB-1	2/8/2016	947
PB-2	2/8/2016	327
PB-2	5/18/2016	250
PB-1	5/19/2016	1310
PB-1	8/16/2016	962
PB-2	8/16/2016	134
PB-1	11/15/2016	1190
PB-2	11/15/2016	463
PB-1	2/28/2017	907
PB-2	2/28/2017	132
PB-1	5/24/2017	1440
PB-2	5/24/2017	577
PB-1	9/28/2017	2080
PB-2	9/28/2017	392
PB-1	11/14/2017	2070
PB-2	11/14/2017	1260
PB-1	12/12/2017	2170
PB-2	12/12/2017	965
PB-1	1/16/2018	2140
PB-2	1/16/2018	1270
PB-1	2/5/2018	2240
PB-1	2/7/2018	2130
PB-2	2/7/2018	1140
PB-1	5/3/2018	1510
PB-2	5/3/2018	567
PB-3	5/3/2018	19.8
PB-1	6/11/2018	1930
PB-2	6/11/2018	1130
PB-3	6/11/2018	66.9
PB-1	7/12/2018	2060
PB-2	7/12/2018	1160
PB-3	7/12/2018	313
PB-1	8/15/2018	2030
PB-2	8/15/2018	1220
PB-3	8/15/2018	172
PB-1	9/1/2018	1850
PB-2	9/1/2018	1210
PB-3	9/1/2018	463

Outagamie County Northeast Landfill Historical Data
Ammonia, Nitrogen, mg/L
2012-2020

Point Name	Sample Date	Nitrogen, Ammonia, Dissolved (mg/L as N)
PB-1	10/1/2018	1750
PB-2	10/1/2018	1190
PB-3	10/1/2018	782
PB-1	11/1/2018	1860
PB-2	11/1/2018	1230
PB-3	11/1/2018	412
PB-1	12/1/2018	2090
PB-2	12/1/2018	887
PB-3	12/1/2018	937
PB-1	1/1/2019	1320
PB-2	1/1/2019	1350
PB-3	1/1/2019	959
PB-1	2/1/2019	1760
PB-2	2/1/2019	1530
PB-3	2/1/2019	1280
PB-1	3/1/2019	741
PB-2	3/1/2019	537
PB-3	3/1/2019	529
PB-1	4/1/2019	1330
PB-2	4/1/2019	922
PB-3	4/1/2019	792
PB-1	5/1/2019	1440
PB-2	5/1/2019	1270
PB-3	5/1/2019	917
PB-1	6/1/2019	1620
PB-2	6/1/2019	1330
PB-3	6/1/2019	1020
PB-1	7/1/2019	1790
PB-2	7/1/2019	1310
PB-3	7/1/2019	431
PB-1	8/1/2019	1680
PB-2	8/1/2019	1370
PB-3	8/1/2019	577
PB-1	8/29/2019	2000
PB-2	8/29/2019	1430
PB-3	8/29/2019	965
PB-1	9/4/2019	1870
PB-2	9/4/2019	1360
PB-3	9/4/2019	656
PB-1	9/19/2019	1960
PB-2	9/19/2019	1580
PB-3	9/19/2019	791
PB-1	10/2/2019	841
PB-2	10/2/2019	1380
PB-3	10/2/2019	308
PB-1	10/21/2019	927
PB-2	10/21/2019	658

Outagamie County Northeast Landfill Historical Data
Ammonia, Nitrogen, mg/L
2012-2020

Point Name	Sample Date	Nitrogen, Ammonia, Dissolved (mg/L as N)
PB-3	10/21/2019	652
PB-1	11/6/2019	692
PB-2	11/6/2019	524
PB-3	11/6/2019	433
PB-1	11/21/2019	840
PB-2	11/21/2019	726
PB-3	11/21/2019	491
PB-1	12/4/2019	1050
PB-2	12/4/2019	776
PB-3	12/4/2019	641
PB-1	12/27/2019	734
PB-2	12/27/2019	668
PB-3	12/27/2019	693
PB-1	1/9/2020	934
PB-2	1/9/2020	900
PB-3	1/9/2020	939
PB-1	1/30/2020	1820
PB-2	1/30/2020	1680
PB-3	1/30/2020	1650
PB-1	2/6/2020	1410
PB-2	2/6/2020	1400
PB-3	2/6/2020	1340
PB-1	2/19/2020	1860
PB-2	2/19/2020	1630
PB-3	2/19/2020	1740
PB-1	3/4/2020	1160
PB-2	3/4/2020	1370
PB-3	3/4/2020	984
PB-1	3/18/2020	1370
PB-2	3/18/2020	1520
PB-3	3/18/2020	1350
PB-1	4/2/2020	1250
PB-2	4/2/2020	1080
PB-3	4/2/2020	1350
PB-1	4/29/2020	1850
PB-2	4/29/2020	1370
PB-3	4/29/2020	1890
PB-1	5/4/2020	1930
PB-2	5/4/2020	1400
PB-3	5/4/2020	1800
PB-1	5/21/2020	1480
PB-2	5/21/2020	1080
PB-3	5/21/2020	1140
PB-1	6/8/2020	1690
PB-2	6/8/2020	1180
PB-3	6/8/2020	1490
PB-1	6/19/2020	1880

Outagamie County Northeast Landfill Historical Data
Ammonia, Nitrogen, mg/L
2012-2020

Point Name	Sample Date	Nitrogen, Ammonia, Dissolved (mg/L as N)
PB-2	6/19/2020	1310
PB-3	6/19/2020	1930
PB-1	7/6/2020	1790
PB-2	7/6/2020	1290
PB-3	7/6/2020	1780
PB-1	7/29/2020	1260
PB-2	7/29/2020	1250
PB-3	7/29/2020	1650
PB-1	8/6/2020	1830
PB-2	8/6/2020	1540
PB-3	8/6/2020	1790
PB-1	8/25/2020	1910
PB-2	8/25/2020	1540
PB-3	8/25/2020	2030
PB-1	9/3/2020	1800
PB-2	9/3/2020	1480
PB-3	9/3/2020	1870
PB-1	9/21/2020	1970
PB-2	9/21/2020	1570
PB-3	9/21/2020	1850
PB-1	10/8/2020	1940
PB-2	10/8/2020	1680
PB-3	10/8/2020	1790
PB-1	10/28/2020	2150
PB-2	10/28/2020	1660
PB-3	10/28/2020	2320
PB-1	11/9/2020	2390
PB-2	11/9/2020	1710
PB-3	11/9/2020	1880
PB-1	11/25/2020	2140
PB-2	11/25/2020	1750
PB-3	11/25/2020	2940
PB-1	12/4/2020	2090
PB-2	12/4/2020	1940
PB-3	12/4/2020	3050
PB-1	12/29/2020	2310
PB-2	12/29/2020	1850
PB-3	12/29/2020	2860

Notes:
Data downloaded from WDNR GEMS database

Prepared by: SMB2
Checked by: MRS

Outagamie County Northeast Landfill Historical Data
Leachate Volume Pumped, KGallons
2012-2020

Point Name	Sample Date	Leachate, Volume Pumped (1000 gallons kgal)
PB-1	2/29/2012	62900
PB-1	3/31/2012	1474400
PB-1	4/30/2012	1051800
PB-1	5/31/2012	1449500
PB-1	6/30/2012	537600
PB-1	7/31/2012	682700
PB-1	8/31/2012	365000
PB-1	9/30/2012	51200
PB-1	10/31/2012	1048800
PB-1	11/30/2012	127370
PB-1	12/31/2012	95000
PB-1	1/31/2013	341000
PB-1	2/28/2013	164300
PB-1	3/31/2013	484800
PB-1	4/30/2013	583800
PB-1	5/31/2013	261600
PB-1	6/30/2013	294200
PB-1	7/31/2013	270200
PB-1	8/31/2013	98400
PB-1	9/30/2013	83600
PB-1	10/31/2013	87000
PB-1	11/30/2013	251700
PB-1	3/31/2014	219100
PB-1	4/30/2014	379500
PB-1	5/31/2014	258700
PB-1	6/30/2014	345800
PB-1	7/31/2014	204000
PB-1	8/31/2014	173300
PB-1	9/30/2014	266300
PB-1	10/31/2014	254100
PB-1	11/30/2014	180900
PB-1	12/31/2014	476500
PB-1	1/31/2015	193500
PB-1	2/28/2015	270500
PB-1	3/31/2015	356700
PB-2	3/31/2015	162600
PB-1	4/30/2015	337000
PB-2	4/30/2015	402000
PB-1	5/31/2015	268100
PB-2	5/31/2015	315600
PB-1	6/30/2015	403400
PB-2	6/30/2015	728600
PB-1	7/31/2015	192600
PB-2	7/31/2015	120200
PB-1	8/31/2015	154000
PB-2	8/31/2015	160700
PB-1	9/30/2015	215700
PB-2	9/30/2015	519500
PB-1	10/31/2015	147500

Outagamie County Northeast Landfill Historical Data
Leachate Volume Pumped, KGallons
2012-2020

Point Name	Sample Date	Leachate, Volume Pumped (1000 gallons kgal)
PB-2	10/31/2015	156400
PB-1	11/30/2015	171600
PB-2	11/30/2015	195700
PB-1	12/31/2015	493800
PB-2	12/31/2015	450100
PB-1	1/31/2016	237200
PB-2	1/31/2016	125200
PB-1	2/29/2016	392700
PB-2	2/29/2016	218600
PB-1	3/31/2016	566100
PB-2	3/31/2016	280800
PB-1	4/30/2016	309800
PB-2	4/30/2016	165900
PB-1	5/31/2016	169300
PB-2	5/31/2016	145600
PB-1	6/30/2016	257600
PB-2	6/30/2016	428600
PB-1	7/31/2016	112500
PB-2	7/31/2016	118300
PB-1	8/31/2016	127700
PB-2	8/31/2016	64800
PB-1	9/30/2016	216200
PB-2	9/30/2016	320900
PB-1	10/31/2016	176500
PB-2	10/31/2016	108200
PB-1	11/30/2016	244800
PB-2	11/30/2016	133500
PB-1	12/31/2016	329400
PB-2	12/31/2016	273700
PB-1	1/31/2017	471300
PB-2	1/31/2017	395800
PB-1	2/28/2017	258800
PB-2	2/28/2017	126900
PB-1	3/31/2017	351500
PB-2	3/31/2017	276700
PB-1	4/30/2017	463100
PB-2	4/30/2017	348100
PB-1	5/31/2017	498700
PB-2	5/31/2017	178800
PB-1	6/30/2017	362100
PB-2	6/30/2017	376100
PB-1	7/31/2017	188700
PB-2	7/31/2017	206000
PB-1	8/31/2017	255600
PB-2	8/31/2017	107800
PB-1	9/30/2017	324100
PB-2	9/30/2017	229000
PB-1	10/31/2017	470800
PB-2	10/31/2017	256900

Outagamie County Northeast Landfill Historical Data
Leachate Volume Pumped, KGallons
2012-2020

Point Name	Sample Date	Leachate, Volume Pumped (1000 gallons kgal)
PB-1	11/30/2017	267500
PB-2	11/30/2017	84900
PB-1	12/31/2017	241700
PB-2	12/31/2017	93000
PB-1	1/31/2018	334400
PB-2	1/31/2018	95500
PB-3	1/31/2018	109500
PB-1	2/28/2018	269000
PB-2	2/28/2018	131200
PB-3	2/28/2018	227100
PB-1	3/31/2018	211600
PB-2	3/31/2018	98400
PB-3	3/31/2018	405900
PB-1	4/30/2018	478500
PB-2	4/30/2018	330600
PB-3	4/30/2018	1050700
PB-1	5/31/2018	214400
PB-2	5/31/2018	229400
PB-3	5/31/2018	682500
PB-1	6/30/2018	194700
PB-2	6/30/2018	180100
PB-3	6/30/2018	499800
PB-1	7/31/2018	224900
PB-2	7/31/2018	132000
PB-3	7/31/2018	293500
PB-1	8/31/2018	244800
PB-2	8/31/2018	258800
PB-3	8/31/2018	512200
PB-1	9/30/2018	183700
PB-2	9/30/2018	328426
PB-3	9/30/2018	1798544
PB-1	10/31/2018	264600
PB-2	10/31/2018	249734
PB-3	10/31/2018	962350
PB-1	11/30/2018	197200
PB-2	11/30/2018	177949
PB-3	11/30/2018	272240
PB-1	12/31/2018	224100
PB-2	12/31/2018	76529
PB-3	12/31/2018	187910
PB-1	1/31/2019	268800
PB-2	1/31/2019	173879
PB-3	1/31/2019	287854
PB-1	2/28/2019	201900
PB-2	2/28/2019	106434
PB-3	2/28/2019	185527
PB-1	3/31/2019	439900
PB-2	3/31/2019	82330
PB-3	3/31/2019	440420

Outagamie County Northeast Landfill Historical Data
Leachate Volume Pumped, KGallons
2012-2020

Point Name	Sample Date	Leachate, Volume Pumped (1000 gallons kgal)
PB-1	4/30/2019	272944
PB-2	4/30/2019	269864
PB-3	4/30/2019	275994
PB-1	5/31/2019	260371
PB-2	5/31/2019	229223
PB-3	5/31/2019	246264
PB-1	6/30/2019	193391
PB-2	6/30/2019	257341
PB-3	6/30/2019	191429
PB-1	7/31/2019	200990
PB-2	7/31/2019	228691
PB-3	7/31/2019	160497
PB-1	8/31/2019	239011
PB-2	8/31/2019	258478
PB-3	8/31/2019	212527
PB-1	9/30/2019	268022
PB-2	9/30/2019	347370
PB-3	9/30/2019	404095
PB-1	10/31/2019	305480
PB-2	10/31/2019	372604
PB-3	10/31/2019	333010
PB-1	11/30/2019	321289
PB-2	11/30/2019	251948
PB-3	11/30/2019	234569
PB-1	12/31/2019	391571
PB-2	12/31/2019	316217
PB-3	12/31/2019	295881
PB-1	1/31/2020	311900
PB-2	1/31/2020	342200
PB-3	1/31/2020	195700
PB-1	2/29/2020	328900
PB-2	2/29/2020	223500
PB-3	2/29/2020	172800
PB-1	3/31/2020	653900
PB-2	3/31/2020	372400
PB-3	3/31/2020	399300
PB-1	4/30/2020	300400
PB-2	4/30/2020	318700
PB-3	4/30/2020	222800
PB-1	5/31/2020	334700
PB-2	5/31/2020	354900
PB-3	5/31/2020	312300
PB-1	6/30/2020	301400
PB-2	6/30/2020	374600
PB-3	6/30/2020	303900
PB-1	7/31/2020	401100
PB-2	7/31/2020	374300
PB-3	7/31/2020	268300

Outagamie County Northeast Landfill Historical Data
Leachate Volume Pumped, KGallons
2012-2020

Point Name	Sample Date	Leachate, Volume Pumped (1000 gallons kgal)
PB-1	8/31/2020	430600
PB-2	8/31/2020	228100
PB-3	8/31/2020	150100
PB-1	9/30/2020	449300
PB-2	9/30/2020	310600
PB-3	9/30/2020	38200
PB-1	10/31/2020	388500
PB-2	10/31/2020	157800
PB-3	10/31/2020	235300
PB-1	11/30/2020	411300
PB-2	11/30/2020	260600
PB-3	11/30/2020	142800
PB-1	12/31/2020	397600
PB-2	12/31/2020	252900
PB-3	12/31/2020	201300

Notes:

Data downloaded from WDNR GEMS database

Highlighted cells indicate meter counter corrections from 2018-2019 analysis.

Prepared by: SMB2

Checked by: MRS

Appendix B
Projected Cost Estimates

Table 1

Summary of Cost Projection Inputs

HOTV Treatment Costs			
Volume Charge per 1,000 gallons =	$	9.38	includes 25% Little Chute surcharge
BOD Charge Over 180 mg/L =	$	0.189	
BOD Charge Based on Projected BOD Concentration of 535 mg/l =	$	0.000875	includes 25% Little Chute surcharge
NH3 Charge Over 180 mg/L =	$	1.236	
NH3 Charge Based on Projected BOD Concentration of 1,663 mg/l =	$	0.021000	includes 25% Little Chute surcharge
NEW Water Treatment Costs			
Total Treatment Cost per 1,000 gallons =	$	27.00	
Cost for Hauling and Treatment per Gallon =	$	0.0854	See Attachment 2
Capital Costs			
Tank and Loadout (Optoins 1, 2 & 3) =	$	746,000	See Attachment 1
Pretreatment System =	$	5,474,000	See Attachments 3 and 5
Operating and Maintenance Cost			
Tank and Loadout Maintenance (Options 1, 2 & 3) =	$	1,000.00	
Pretreatment System (Option 4) =	$	304,186	See Attachment 4
Rate of Inflation =		2.8750%	
Interest on Funds Borrowed for Capital Construction Projects =		2.0000%	

Table 2 - Base Case

NELF to HOTV - no pretreatment		2023	2024	2025	2026	2027	2028	2029	2030	2031
BOD, cost/yr		7,249	7,145	7,110	7,129	6,501	6,107	5,872	4,635	3,684
Ammonia, cost/yr		173,968	171,484	170,640	171,090	156,014	146,577	140,935	111,244	88,407
Total Annual Loading Charge		181,216	178,630	177,750	178,218	162,514	152,684	146,807	115,879	92,091
HOTV Volume Charge (per 1,000 gal)		$ 9.64	$ 9.92	$ 10.21	$ 10.50	$ 10.80	$ 11.11	$ 11.43	$ 11.76	$ 12.10
Volume Charge		77,664	76,556	76,178	76,379	69,649	65,436	62,917	49,662	39,467
Annual O&M Cost		$ 111	$ 114	$ 118	$ 121	$ 124	$ 128	$ 132	$ 135	$ 139
Subtotal		258,991	255,299	254,045	254,719	232,288	218,249	209,856	165,677	131,697
	Total 2023-2031									
Total Expenses	**1,980,822**	258,991	255,299	254,045	254,719	232,288	218,249	209,856	165,677	131,697

Table 3 - Option 1 - Haul 50% of NELF Leachate to NEW Water

NELF to HOTV - no pretreatment		2023	2024	2025	2026	2027	2028	2029	2030	2031
BOD, cost/yr		3,624	3,573	3,555	3,564	3,250	3,054	2,936	2,318	1,842
Ammonia, cost/yr		86,984	85,742	85,320	85,545	78,007	73,289	70,467	55,622	44,204
Total Annual Loading Charge		90,608	89,315	88,875	89,109	81,257	76,342	73,404	57,939	46,045
HOTV Volume Charge (per 1,000 gal)		$ 9.64	$ 9.92	$ 10.21	$ 10.50	$ 10.80	$ 11.11	$ 11.43	$ 11.76	$ 12.10
Volume Charge		38,832	38,278	38,089	38,190	34,825	32,718	31,459	24,831	19,734
Annual O&M Cost	Total 2023-2031	$ 111	$ 114	$ 118	$ 121	$ 124	$ 128	$ 132	$ 135	$ 139
Subtotal	990,972	129,551	127,707	127,082	127,420	116,206	109,188	104,994	82,906	65,918
NELF Hauling to NEW Water										
50% percentage to NEW Water										
Depreciation/Amortization of Capital Costs		85,283	85,283	85,283	85,283	85,283	85,283	85,283	85,283	85,283
Interest on Borrowed Funds		13,927	12,932	11,937	10,942	9,947	8,952	7,957	6,962	5,967
Hauling & Treatment		$ 0.0879	$ 0.0904	$ 0.0930	$ 0.0957	$ 0.0984	$ 0.1012	$ 0.1041	$ 0.1071	$ 0.1102
Total (Loading, hauling, unloading, treatment)		353,734	348,685	346,967	347,882	317,228	298,040	286,567	226,195	179,761
Annual O&M	Total 2023-2031	$ 1,418	$ 1,458	$ 1,500	$ 1,543	$ 1,588	$ 1,633	$ 1,680	$ 1,729	$ 1,778
Subtotal	3,562,133	452,944	446,900	444,187	444,108	412,458	392,275	379,808	318,441	271,011
	Total 2023-2036									
Total Expenses	**3,562,133**	582,496	574,607	571,269	571,528	528,665	501,464	484,802	401,347	336,930

Table 4 - Option 2 - Haul 75% of NELF Leachate to NEW Water

NELF to HOTV - no pretreatment		2023	2024	2025	2026	2027	2028	2029	2030	2031
BOD, cost/yr		1,812	1,786	1,777	1,782	1,625	1,527	1,468	1,159	921
Ammonia, cost/yr		43,492	42,871	42,660	42,772	39,003	36,644	35,234	27,811	22,102
Total Annual Loading Charge		45,304	44,657	44,437	44,555	40,629	38,171	36,702	28,970	23,023
HOTV Volume Charge (per 1,000 gal)		$ 9.64	$ 9.92	$ 10.21	$ 10.50	$ 10.80	$ 11.11	$ 11.43	$ 11.76	$ 12.10
Volume Charge		19,416	19,139	19,045	19,095	17,412	16,359	15,729	12,416	9,867
Annual O&M Cost	Total 2023-2031	$ 111	$ 114	$ 118	$ 121	$ 124	$ 128	$ 132	$ 135	$ 139
Subtotal	496,048	64,831	63,911	63,600	63,770	58,165	54,658	52,563	41,521	33,029
NELF Hauling to NEW Water										
75%	percentage to NEW Water									
Depreciation/Amortization of Capital Costs		85,283	85,283	85,283	85,283	85,283	85,283	85,283	85,283	85,283
Interest on Borrowed Funds		13,927	12,932	11,937	10,942	9,947	8,952	7,957	6,962	5,967
Hauling & Treatment		$ 0.0879	$ 0.0904	$ 0.0930	$ 0.0957	$ 0.0984	$ 0.1012	$ 0.1041	$ 0.1071	$ 0.1102
Trucking Charge (Loading, hauling, unloading)		530,601	523,027	520,451	521,824	475,842	447,060	429,851	339,293	269,641
Annual O&M	Total 2023-2031	$ 1,418	$ 1,458	$ 1,500	$ 1,543	$ 1,588	$ 1,633	$ 1,680	$ 1,729	$ 1,778
Subtotal	4,914,664	629,811	621,243	617,671	618,049	571,072	541,295	523,091	431,538	360,892
	Total 2023-2031									
Total Expenses	**4,914,664**	694,643	685,153	681,271	681,819	629,238	595,954	575,654	473,059	393,921

Table 5 - Option 3 - Haul 100% of NELF Leachate to NEW Water

NELF to HOTV - no pretreatment		2023	2024	2025	2026	2027	2028	2029	2030	2031
BOD, cost/yr		-	-	-	-	-	-	-	-	-
Ammonia, cost/yr		-	-	-	-	-	-	-	-	-
Total Annual Loading Charge		-	-	-	-	-	-	-	-	-
HOTV Volume Charge (per 1,000 gal)		$ 9.64	$ 9.92	$ 10.21	$ 10.50	$ 10.80	$ 11.11	$ 11.43	$ 11.76	$ 12.10
Volume Charge		-	-	-	-	-	-	-	-	-
Annual O&M Cost	Total 2023-2036	$ -	$ -	$ -	$ -	$ -	$ -	$ -	$ -	$ -
Subtotal	-	-	-	-	-	-	-	-	-	-
NELF Hauling to NEW Water										
100%	percentage to NEW Water									
Depreciation/Amortization of Capital Costs		85,283	85,283	85,283	85,283	85,283	85,283	85,283	85,283	85,283
Interest on Borrowed Funds		13,927	12,932	11,937	10,942	9,947	8,952	7,957	6,962	5,967
Hauling & Treatment		$ 0.0879	$ 0.0904	$ 0.0930	$ 0.0957	$ 0.0984	$ 0.1012	$ 0.1041	$ 0.1071	$ 0.1102
Trucking Charge (Loading, hauling, unloading)		707,468	697,370	693,934	695,765	634,456	596,080	573,135	452,391	359,522
Annual O&M	Total 2023-2031	$ 1,418	$ 1,458	$ 1,500	$ 1,543	$ 1,588	$ 1,633	$ 1,680	$ 1,729	$ 1,778
Subtotal	6,267,194	806,678	795,585	791,155	791,990	729,687	690,315	666,375	544,636	450,772
	Total 2023-2031									
Total Expenses	**6,267,194**	806,678	795,585	791,155	791,990	729,687	690,315	666,375	544,636	450,772

Table 6 - Option 4 - 100% Pretreatment Starting 2024

NELF to HOTV - no pretreatment 2022-2023, Pretreatment 2024-2036		2023	2024	2025	2026	2027	2028	2029	2030	2031
BOD, cost/yr		7,249	-	-	-	-	-	-	-	-
Ammonia, cost/yr		173,968	-	-	-	-	-	-	-	-
Total Annual Loading Charge		181,216	-	-	-	-	-	-	-	-
HOTV Volume Charge (per 1,000 gal)		$ 9.64	$ 9.92	$ 10.21	$ 10.50	$ 10.80	$ 11.11	$ 11.43	$ 11.76	$ 12.10
Volume Charge		38,832	38,278	38,089	38,190	34,825	32,718	31,459	24,831	19,734
Annual O&M Cost	Total 2023-2031	$ 111	$ 114	$ 118	$ 121	$ 124	$ 128	$ 132	$ 135	$ 139
Subtotal	997,471	738,337	38,392	38,207	38,311	34,949	32,846	31,590	24,967	19,873
NELF Pretreatment Facility										
Depreciation/Amortization of Capital Costs		625,709	625,709	625,709	625,709	625,709	625,709	625,709	625,709	625,709
Interest on Borrowed Funds		112,628	100,114	87,600	75,086	62,572	50,058	37,544	25,030	12,516
Operating Cost	Total 2023-2031		332,252	$ 341,804	$ 351,631	$ 361,740	$ 372,140	$ 382,839	$ 393,846	$ 405,169
Subtotal	9,135,946	738,337	1,058,074	1,055,113	1,052,425	1,050,021	1,047,907	1,046,092	1,044,584	1,043,394
Total Expenses	**10,133,418**	1,476,673	1,096,466	1,093,319	1,090,736	1,084,970	1,080,753	1,077,682	1,069,551	1,063,267

Attachment 1

Preliminary Leachate Storage and Loadout Costs
NELF -- Options 1, 2 & 3

Item	Units	No. of Units	Unit Cost[1]	Extension
1. - NELF Single 50,000 gal Tank and Loadout				
a. Mobilization	lump sum	1	$25,000	$25,000
b. 50,000 gal Double Wall ACT-100 Tank (12'x60	lump sum	1	$165,000	$165,000
c. Epoxy Lining Tank Interior (optional)	lump sum	1	$22,375	$22,375
d. Deadman Anchoring Package	lump sum	1	$16,500	$16,500
e. Freight to Landfill	lump sum	1	$6,000	$6,000
f. Tank Installation	lump sum	1	$75,000	$75,000
g. Pump, Controls and Loadout	lump sum	1	$100,000	$100,000
h. Valve Manhole	lump sum	1	$15,000	$15,000
i. Double Encased Leachate Transfer Pipe (8"/12"	linear feet	100	$125	$12,500
j. Electrical	lump sum	1	$50,000	$50,000
k. Restoration	lump sum	1	$10,000	$10,000
l. Misc. Engineering and Permitting	percent	1	20%	$99,475
			Subtotal (rounded to nearest thousand) =	$597,000
			25% Contingency (rounded to nearest thousand) =	$149,000
			Total Estimated Cost (rounded to nearest thousand) =	**$746,000**

[1] - Based on 2022 estimated costs..

Prepared by: MRS

Checked by: RGB

Attachment 2

Options 1, 2 & 3
Preliminary NELF Leachate Hauling and Treatment Costs (NEW Water WWTP)

Item	Units	No. of Units	Unit Cost	Extension
1. - Hauling Costs (6,000 gal Tanker Trucks, $175/hr for truck/operator)				
a. Loading, 20 minutes @ $150/hr	hours	0.33	$175.00	$58.28
b. Hauling, 90 minutes roundtrip @ $150/hr	hours	1.50	$175.00	$262.50
c. Unloading, 10 minutes @ $150/hr	hours	0.17	$175.00	$29.75
			Total Hauling Cost Per Truckload=	$350.53
			Cost per gallon =	**$0.0584**
2. - Treatment Costs (NEW Water)[1]				
a. Treatment cost per truckload ($27/1000 gallons)	1,000 gallons	6	$27.00	$162.00
			Total Treatment Cost Per Truckload=	$162.00
			Treatment Cost per gallon =	**$0.0270**
			Estimated Annual Hauling and Treatment Cost per gallon =	**$0.0854**

[1] - Based on estimated cost provided by NEW Water in 2021.

Prepared by: MRS
Checked by: RGB

Attachment 3

Estimated Pretreatment System Capital Construction Costs

Item	Quantity	Unit	Unit Price	Installation	Capital Costs
Optional EQ Tank Equipment					
Tank - 50,000 gallon double wall	1	EA	$ 262,739	0%	$ 262,800
Tank Concrete Pad	1	EA	$ 34,615	0%	$ 34,700
Pump, controls and loadout	1	EA	$ 125,188	0%	$ 125,200
Valve Manhole	1	EA	$ 18,778	0%	$ 18,800
Pipe	100	LF	$ 156	0%	$ 15,700
BOD Reactor Equipment					
Steel bolted tank	1	EA	$ 151,259	0%	$ 151,300
Concrete tank base	1	EA	$ 87,820	0%	$ 87,900
Internal piping/diffusers	1	EA	$ 350,340	10%	$ 385,400
Recycle pump	1	EA	Included		
Blowers	3	EA	Included		
Media	1	EA	$ 90,981	0%	$ 91,000
Instrumentation	1	LS	$ 10,165	5%	$ 10,700
NH3 Reactor Equipment					
Steel bolted tank	1	EA	$ 200,176	0%	$ 200,200
Concrete tank base	1	EA	$ 139	0%	$ 200
Internal piping/diffusers	1	EA	$ 350,340	10%	$ 385,400
Recycle pump	1	EA	Included		
Blowers	3	EA	Included		
Media	1	EA	$ 162,808	0%	$ 162,900
Instrumentation	1	LS	$ 0	5%	$ 100
Piping				15%	$ 289,900
Electrical				14%	$ 278,300
Misc. Metals				1%	$ 19,400
Site Work				8%	$ 154,600
Overhead and Profit				15%	$ 401,200
Mobilization, Bonding, and Insurance				5%	$ 133,800
Escalation				3%	$ 80,300
Allowances				3%	$ 80,300
Subtotal					$ 3,370,100
Soil Borings				1%	$ 33,800
Legal and Administration				2%	$ 50,600
Engineering				7%	$ 236,000
CQA, O&M Manual and Post-Construction				8%	$ 269,700
Contingency				25%	$ 842,600
	Total Capital Cost (rounded to nearest thousand)=				**$ 4,803,000**

[1] - Based on 2022 estimated costs..

Prepared by: RGB

Checked by: MRS

Attachment 4

Estimated Pretreatment System Operating Costs

Item	Annual Cost	Description
BOD Pump power	$ 30,310	32 BHP continuous at $0.145/kWh
BOD Blower power	$ 49,250	52 BHP continuous at $0.145/kWh
NH3 Pump power	$ 51,140	54 BHP continuous at $0.145/kWh
NH3 blower power	$ 63,450	67 BHP continuous at $0.145/kWh
Meter Charge	$ 36	$3.00/month, 1 meter
Operator	$ 100,000	One full-time operator
Equipment and facilities maintenance	$ 10,000	Misc. maintenance and repair of equipment and structures
Total Estimated Cost (rounded to nearest thousand) =	**$ 304,186**	

[1] - Based on 2022 estimated costs..

Prepared by: RGB

Checked by: MRS

Attachment 5

Estimated Construction Costs to Transfer NELF Leachate to Pretreatment System

Item	Units	No. of Units	Unit Cost[1]	Extension
a. Double encased (6"/10") Leachate Forcemain P	lump sum	3,700	$60	$222,000
b. Leak Detection Manholes	lump sum	5	$15,000	$75,000
c. Modification to Existing NELF Pumps and Mar	lump sum	1	$100,000	$75,000
d. Connection to existing forcemain	lump sum	1	$50,000	$50,000
e. Electrical	lump sum	1	$25,000	$25,000
f. Misc. Engineering and Permitting	percent	1	20%	$89,400
			subtotal =	$536,400
			25% Contingency =	$134,100
			Total Estimated Cost (rounded to nearest thousand) =	**$671,000**

[1] - Based on 2022 estimated costs..

Prepared by: MRS

Checked by: RGB

Appendix C
Leachate Treatment Rates

Little Chute
ESTABLISHED 1848

108 W Main St
Little Chute, WI 54140
molly@littlechutewi.org
920-423-3854

Invoice # 21-0110

DATE: 7/22/2021

TO:
Outagamie County
Department of Solid Waste
1419 Holland Road
Appleton, WI 54911-8985

FROM:
Village of Little Chute
108 W. Main Street
Little Chute, WI 54140

SEWER BILLING

PERIOD: MAY 1-31

		NORTHEAST			EAST		
		PB1	PB2	PB3	E1	E2	Total
		Site #1, NE I	Site #2, NE II	Site #3, NE III	Site #4, E 1	Site #5, E 2	
READINGS - TOTAL GALLONS		237,015	189,774	274,076	44,939	42,620	788,424
VOLUME	(V) =	237,015	189,774	274,076	44,939	42,620	
BOD	(B) =	2,405.00	631.00	2,765.00	482.50	118.00	
SUSPENDED SOLIDS	(S) =	99.00	51.20	95.00	80.80	43.50	
PHOSPHORUS	(P) =	20.10	17.95	9.30	4.25	5.45	
AMMONIA	(A) =	2,465.00	1,860.00	2,100.00	398.50	620.00	
VOLUME CHARGE: (V) X $7.50 / 1,000 GALLONS		$ 1,777.61	$ 1,423.31	$ 2,055.57	$ 337.04	$ 319.65	$ 5,913.18
MONTHLY SEWER METER CHARGE OF $3.00/MONTH		$ 3.00	$ 3.00	$ 3.00	$ 3.00	$ 3.00	$ 15.00
B.O.D. SURCHARGE: (V) / 1,000,000 X (B - 180 mg/l) X 8.34 lb./gal. X $0.189/lb.		$ 831.25	$ 134.91	$ 1,116.76	$ 21.43	$ -	$ 2,104.35
SUSPENDED SOLIDS SURCHARGE: (V) / 1,000,000 X (S - 250 mg/l) X 8.34 lb. gal. X 0.238/lb.		$ -	$ -	$ -	$ -	$ -	$ -
PHOSPHORUS SURCHARGE: (V) / 1,000,000 X (P - 8 mg/l) X 8.34 lb./gal. X $6.253/lb.		$ 149.56	$ 98.47	$ 18.58	$ -	$ -	$ 266.61
AMMONIA (V) / 1,000,000 X (A - 35 mg/l) X 8.34 lb./gal. X $1.236/lb.		$ 5,936.99	$ 3,570.13	$ 5,834.12	$ 168.39	$ 257.01	$ 15,766.64
		8698.41	5229.82	9025.03	529.86	579.66	
							$ 24,065.78
SURCHARGE: 25%							$ 6,016.45
TOTAL DUE BY AUGUST 20, 2021							$ 30,082.23

1% PENALTY PER MONTH ON PAST DUE AMOUNTS

PLEASE RETURN ONE COPY WITH YOUR PAYMENT
THANK YOU.

Sturzl, Martin R

From: Georgel, Sara <SGeorgel@newwater.us>
Sent: Wednesday, December 15, 2021 12:13 PM
To: Sturzl, Martin R
Cc: Beine, Sara M; Qualls, Nathan
Subject: RE: [External] RE: Outagamie County Landfill

Marty,

The 2022 rate for the leachate is $27 per 1,000 gallons. The main driver for the lower rate in 2022 is a decrease in the cost to treat BOD.

The same analytical data from the P1, P2, and P3 monitoring locations was used to calculate the 2022 rate.

BOD: 3390 mg/L
TSS: 88 mg/L
TKN: 1464 mg/L
TP: 12 mg/L

Rates are effective on March 1.

Let me know if you need anything else.

Sara Georgel | Pretreatment Program Coordinator
Green Bay Metropolitan Sewerage District
NEW Water
The brand of the Green Bay Metropolitan Sewerage District
O: (920) 438-1079 | **M**: (920) 510-4208
2231 N. Quincy St., Green Bay, WI 54302 | www.newwater.us
Follow us on social media:

From: Sturzl, Martin R [mailto:Martin.Sturzl@Foth.com]
Sent: Tuesday, November 30, 2021 9:32 AM
To: Georgel, Sara <SGeorgel@newwater.us>
Cc: Beine, Sara M <Sara.Beine@foth.com>
Subject: RE: [External] RE: Outagamie County Landfill